N 70 25301

NASA CR102609

PROPULSION DIVISION

STABILITY CHARACTERIZATION OF ADVANCED INJECTORS

[redacted] Final Report on Phase I of Contract NAS 8-20672

Prepared for

MARSHALL SPACE FLIGHT CENTER
Huntsville, Alabama

Report 20672-PI[redacted]F 25 October 1968

CASE FILE COPY

AEROJET GENERAL TIRE GENERAL

AEROJET-GENERAL CORPORATION
SACRAMENTO, CALIFORNIA

STABILITY CHARACTERIZATION OF ADVANCED INJECTORS

Final Report on Phase I of
Contract NAS 8-20672

Prepared for

MARSHALL SPACE FLIGHT CENTER
Huntsville, Alabama

Report 20672-PIF 25 October 1968

Approved

J. M. McBride
Project Manager

C. B. McGough
Program Manager

AEROJET-GENERAL CORPORATION
A SUBSIDIARY OF THE GENERAL TIRE & RUBBER COMPANY

TABLE OF CONTENTS

		Page
I.	Introduction	1
II.	Summary	2
	A. Summary of Program	2
	B. Task I: Analytical Model Development	3
	C. Task II: Annular Thrust Chamber Assembly Tests	5
	D. Task III: Transverse Excitation	7
III.	Conclusions	10
IV.	Experimental Tasks	13
	A. Test Apparatus	13
	B. Test Procedure	20
	C. Test Results	28
V.	Analytical Tasks	34
	A. Annular Thrust Chamber Analysis	34
	B. Staged Combustion Model	38

FIGURE LIST

	Figure No.
Annular Thrust Chamber Assembly on Test Stand C-6	1
Transverse Excitation Chamber with Lid Removed	2
High Injection Density Annular Triplet Injector Schematic	3
Low Injection Density Triplet Injector Schematic	4
Annular Coaxial Injector Schematic	5
Annular Coaxial Injector	6
Annular Thrust Chamber Assembly	7
Excitation Chamber Triplet Injector Insert Schematic	8
Transverse Excitation Chamber Assembly Schematic	9
Isometric Drawing of Test Stand C-6	10
View of C-6 Test Stand and Intensifiers	11
Typical Start Transient Record of an Annular Coaxial Test on Test Stand C-6	12
Flow Schematic for Test Stand C-6	13
Transverse Excitation Chamber on Test Stand J-1	14
Flow Schematic for Test Stand J-1	15
Typical Start Transient for a Transverse Excitation Chamber Test on Test Stand J-1	16
Initial Pulse Amplitude Pc = 1000 psia	17
Initial Pulse Amplitude Ps = 2500 psia	18
High Frequency Stability Results - All Injectors at 900 Pc 1200 psia	19
High Frequency Stability Results - All Injectors at 2400 pc 2700 psia	20
Impingement - Velocity Ratio Function Versus VRSinϕ for Impinging Coaxial Element	21
Frequency Response Characteristics of Triplet Injectors	22
Effect of Pressure on Non-Coaxial Elements	23
Tangential Mode Acoustic Frequencies for Annular Chambers	24
Staged Combustion Model	25
Effect of Pressure on Impinging Coaxial Injectors	26

FIGURE LIST (cont.)

	Figure No.
Case I, Orifice Diameter Versus Stability	27
Case II, Orifice Diameter Versus Stability	28
Computer Program Flow Schematic	29
Computer Program flow Schematic	30
Data Package Computer Deck Organization	31
Annular Combustion Computer Input Parameters	32
Annular Chamber Computer Input Parameters	33
Cylindrical Chamber Computer Input Parameters	34
n, τ Plots	35
n, τ Plots	36
n, τ Plots	37

TABLE LIST

	Table No.
Comparison of Coaxial Elements, NAS 8-11741 and NAS 8-20672	1
Coaxial Injector Design Characteristics	2
Comparison of Triplet Injector Designs	3
Engine Nozzle Design Parameters	4
Design Features of Excitation Chamber Injectors	5
Acoustics Frequencies of Excitation Chamber	6
Excitation Chamber Nozzle Throat Width	7
Steady State and Stability Test Results	8
Excitation Engine Performance Data Summary 11-Element Triplet Injector	9
Transverse Excitation Chamber High Frequency Data	10
Bessel Function Value $(S_{\nu\eta})_{ann}$ for Tangential Modes in Annular Chambers	11

NOMENCLATURE

P	Pressure
u	Mach number
ψ	Radial dependence of pressure
Θ	Tangential dependence of pressure
R'	Ratio of inner radius to outer radius
γ	Ratio of specific heats
A	Area of nozzle
s	Laplace variable
z	Axial distance
c	Speed of sound
n	Interaction index
R	Mixture ratio
α	Longitudinal nozzle admittance coefficient
$\dot{m}$	Mass flow rate
τ	Time lag
ρ	Density
L	Length of chamber
Z	Orifice resistance
G	Flow admittance
B	$\frac{1 + \alpha \bar{u}}{1 - \alpha \bar{u}}$
P	$n(1-e^{-s\tau})$
F	Defined by Equation 7
$A_{\nu\eta}$, $B_{\nu\eta}$, $C_{\nu\eta}$	Distribution coefficients
C_1, C_2	Constants
$S_{\nu\eta}$	Separation constant

Subscripts:

x	oxidizer
f	fuel
p	primary
s	secondary
t	turbine

I. INTRODUCTION

The purpose of Phase I of this program was to determine the stability characteristics of various injectors using high combustion chamber pressures with the cryogenic propellants, hydrogen and oxygen. Coaxial injectors for the most part were characterized under previous programs at Aerojet, NASA, and other government subcontractors. The remaining design feature to be evaluated on the coaxial injector was the effect of injection density on combustion stability. This effect was evaluated during the test portion of this program in an annular combustion chamber.

Combustion stability correlations based on Sensitive Time Lag Theory require an accurate definition of theoretical considerations. Consequently, part of the investigation necessary to advance current knowledge in combustion stability was the advancement of Sensitive Time Lag Theory. A refinement to the basic theory was the addition of terms to account for higher combustion chamber Mach numbers and an extension of the current model to include the toroidal or annular combustors.

As part of the experimental program an experimental tool, the "Transverse Excitation Chamber," was designed and the feasibility of using this tool to measure the frequency sensitivity of a particular injector demonstrated.

Many preliminary designs were evaluated prior to the selection of the designs fabricated and tested on this program.

Phase I was scheduled for 12 months of technical effort, but was extended to 15 months to include additional hardware fabrication.

II. SUMMARY

A. SUMMARY OF PROGRAM

The stability characteristics of two injection concepts to be used in advanced injectors for high chamber pressure, hydrogen/oxygen systems were determined on this phase of the program. The two injection concepts tested were: coaxial with central oxidizer and 30° included angle fuel impingement; and triplet injectors with 60° included angle oxidizer-fuel-oxidizer pattern. Analytical model developments were advanced for the Sensitive Time Lag Theory, and a research tool termed "Transverse Excitation Chamber" was demonstrated.

Analytical model developments included expansion and refinement of the existing Sensitive Time Lag model to include annular combustion chambers and initiation of analyses to include feed system coupled pressure oscillations as encountered with the staged combustion system.

The second major task consisted of testing injector patterns in an annular thrust chamber. Injectors designed and fabricated for this task included one coaxial and two versions of one basic triplet element pattern. The coaxial injector was patterned after an injector tested on Contract NAS 8-11741, except that the injection density (total propellant flow rate per projected injector face area) was nearly doubled. The triplet injectors were patterned after a design being considered for NASA's Advanced Cryogenic Rocket Engine. The major difference between the two versions of this injection pattern is that one has nearly twice the injection density of the other. Seven tests on the coaxial injector were made under this task. Two triplet injectors were also fabricated.

The third major task consisted of the design, development, and demonstration of a research tool, the "Transverse Excitation Chamber." This combustor is a variable angle sector chamber that can be varied from 9 to 36°

II, A, Summary of Program (cont.)

and is used to determine the relative sensitivity of injection elements to instability. Six tests conducted with this combustion chamber yielded preliminary results on its effectiveness as a research tool.

A detailed analysis of combustion stability data obtained during the testing of this program is included in this report, and correlations with results from tests conducted on other programs were made. Considerable injector design studies were conducted on this program.

B. TASK I: ANALYTICAL MODEL DEVELOPMENT

1. Annular Combustor Analysis

Analytical tasks on this program included the extension of the basic Sensitive Time Lag model for cylindrical combustion chamber to include annular chambers. A preliminary analysis for the gas-generator-fed staged combustion system was also made.

The analysis for the annular combustion chamber fits into the basic framework of the cylindrical chamber analysis; a few minor modifications are required. In the general solution of the pressure perturbation equation by using separation of variables technique the solution is:

$$P_o = P_o(z)\ \psi_o(r)\ \theta_o(\theta)$$

Three ordinary differential equations for $P_o(z)$, $\psi_o(r)$ and $\theta_o(\theta)$ are obtained.

The solution for the annular combustion chamber case is concerned with the solution of $\psi_o(r)$. The differential equation for $\psi_o(r)$ is a Bessel equation of the form: $\psi_{\nu\eta}(r) - AJ_\nu(S_{\nu\eta} \cdot r) + BY_\nu(S_{\nu\eta} \cdot r)$

II, B, Task I: Analytical Model Development (cont.)

where: J_ν = Bessel function of the first kind
Y_ν = Bessel function of the second kind
$S_{\nu\eta}$ = the transverse mode number

By considering the cylindrical chamber case and the inner wall for the annular case separately and solving these two relationships simultaneously one obtains the following result:

$$J_\nu' (S_{\nu\eta}) Y'_\nu (S_{\nu\eta} R) - J'_\nu (S_{\nu\eta} R) Y'_\nu (S_{\nu\eta}) = o$$

The solution of this equation defines the transverse acoustic mode number, $S_{\nu\eta}$, for annular chambers. This equation has been solved in published literature and values of $S_{\nu\eta}$ are listed. Annular combustion chambers will alter the frequency of the transverse mode from the cylindrical case.

The configuration of the exhaust nozzle affects the nozzle admittance coefficient in much the same manner as for the cylindrical combustion chamber nozzle. The analysis for the annular nozzle is different primarily in the determination of the local contraction ratio. This is accomplished in the computer program by inputing both the inner and outer radii of the chamber and throat.

2. Staged Combustion Model

The system selected for the staged combustion model consists of (1) propellant feed system, (2) primary combustor, (3) secondary combustor, and (4) a turbine. The approach taken was to assume that the engine design parameters are given. The instability zones are then calculated for the secondary combustor, for assumed values of the primary combustion parameters (n_p, τ_p) and the total time lag of the hot gas τ_{FS}. The shift of the instability zones as these combustion parameters are varied shows the nature of the interaction between the two combustors.

II, B, Task I: Analytical Model Development (cont.)

The first-order analysis involves the following assumptions: the propellants are incompressible, the feed lines are short, the combustion is concentrated at the injector, and mean chamber Mach numbers are small.

As a general result of this analysis, it has been observed that the total time lag is from 6 to 10 times larger than the sensitive time lag. Consequently, for frequencies of interest to high frequency instability, the effects of the feed system terms will tend to average over the finite length of the combustion zone. Since the total time lag includes the time required for atomization, vaporization, mixing, and heating of the propellants, some interaction is likely in high pressure engines -- particularly in the secondary combustor.

C. TASK II: ANNULAR THRUST CHAMBER ASSEMBLY TESTS

Annular thrust chamber assembly hardware consisted of three major components: (1) injector with attached axial centerbody, (2) combustion chamber, and (3) annular nozzle. Of the injectors designed for the annular combustion chamber, three were fabricated and one tested. A 600-element triplet injector to deliver 60,000 lb thrust with a total propellant weight flow of 180 lb/sec was fabricated, and a 200-element triplet injector to deliver 20,000 lb thrust with 60 lb/sec total propellant weight flow was also fabricated. To evaluate the effect of injection density on stability a 54-element coaxial injector was designed, fabricated, and tested for comparison with injectors previously built on Contract NAS 8-11741.

The combustion chamber and centerbody were ablatively cooled and both centerbody and chamber converged to form a throat. Two pyrotechnic igniters, three pulse guns, eight high-frequency pressure transducers and three static pressure transducers were located on the combustion chamber.

II, C, Task II: Annular Thrust Chamber Assembly Tests (cont.)

Tests were conducted at mixture ratios from 4 to 6 and chamber pressures of from 1500 to 2500 psia at a constant propellant weight flow of 180 lb/sec.

Each instability pattern observed during the annular testing was nearly identical in its form and was initiated by the 20-grain charge, using a tangential pulse gun. The peak-to-peak overpressures of these instabilities ranged from 800 to 2000 psi. The frequency was approximately 2500 Hz, depending on the acoustic velocity value for each test condition.

Test No. 7, using 200°R hydrogen, experienced -- in addition to its high-frequency instability -- a low-frequency (500 Hz) oscillation which attained an amplitude of 750 psi. Except for one brief occurrence of a low frequency (100 Hz and 100 psi) instability on Test No. 3, there was no other indication of a coupling between the feedlines and the combustion process. It should be pointed out that the large pressure drops across the injector face due to the small orifice design result in significant hydraulic resistances in the circuit.

The effect of chamber Mach number was evaluated in this series of tests by comparing results with test results from Contract NAS 8-11741. The two Mach numbers used were 0.176 and 0.29.

This verification of the Mach number as an important correlating parameter, together with the work of NASA's Lewis Research Center, has led to the selection of six design parameters as being important in combustion stability evaluations. These parameters are functionally related by the following formula:

II, C, Task II: Annular Thrust Chamber Assembly Tests (cont.)

$$f_s = 4550 \left(\frac{M_c}{d_i}\right)^{0.15} \frac{(P_c/P_{critical})^{1/3}}{F}$$

where:

f_s	=	Sensitive frequency (Hz)
M_c	=	Chamber Mach Number
d_i	=	Injection orifice diameter of least volatile propellant, inches
$P_{critical}$	=	Critical pressure of least volatile time controlling propellant, psia
P_c	=	Chamber pressure, psi
F	=	Function of the velocity ratio and impingement angle. This function is not defined for the nonimpinging showerhead coaxial element.

This formula may be used by a designer in his preliminary work to develop an injector configuration whose sensitive frequency is displaced from the first tangential acoustic mode of the thrust chamber. These first order estimates may then be combined with the analytical results of the sensitive time lag computer program to obtain a more detailed engine configuration. Of prime importance is the overall trends which may be observed from changes in any of the six design parameters.

D. TASK III: TRANSVERSE EXCITATION CHAMBER TESTING

The concept of a transverse excitation was originated at Aerojet on a Company-sponsored Independent Research and Development program to evaluate transverse modes of pressure oscillation (tangential instabilities) and simulate the pressure/velocity effects as experienced in a rocket combustion chamber. The transverse excitation chamber tested on this program is described in the following paragraphs.

II, D, Task III: Transverse Excitation Chamber Testing (cont.)

The excitation chamber consisted of three principal parts: (1) chamber, (2) nozzle, and (3) injector inserts. The chamber is a 36° sector of a circle 2-1/4 inches in height. The 36° sector of the 30-inch radius results in a fundamental acoustic frequency in the transverse mode at 1800 Hz. The smallest chamber angle was 9°, which results in a chamber acoustic frequency of 7000 Hz. The height of the chamber (2.17) inches limits the associated acoustic frequency to greater than 13,000 Hz. A single chamber design was used and the chamber angle was varied by inserting steel wedges in the combustion zone to achieve the desired angle. The O-ring-sealed chamber lid is removable to facilitate various injection concepts; ablative liners and throats were used to protect the areas most vulnerable to erosion.

Two triplet injectors were designed and fabricated for testing. One was an 11-element triplet, and the other was a three-element triplet similar to the 11-element triplet design in all but the orifice diameters. The purpose of the larger orifice size was to determine the effect of orifice diameter or thrust per element on combustion stability. Only the 11-element injector inserts were tested during this program.

Testing of the transverse excitation chamber was conducted to measure the growth rates of spontaneous instabilities or decay rates of pulsed pressure perturbations.

Mixture ratios of around 4 and chamber pressures of 1300 to 1400 psi were evaluated during the test series. Two of the three valid tests (in three tests the fuel valve was inoperative) attained these conditions and both experienced spontaneous instabilities. One test exhibited a growth rate of 650 db/sec, while the other test had two distinct growth periods. The first, occurring at the onset of the instability, had a 600 db/sec rate, while the second growth period came after thermal ignition of the 40 grain pulse charge had disrupted the initial instability. Its growth rate was 330 db/sec.

II, D, Task III: Transverse Excitation Chamber Testing (cont.)

From the data obtained, the indication is that over the frequency range of 3000 to 4500 Hz the triplet element has a peak response at 3300 Hz at the specified steady state conditions. This peak response frequency, when related to τ by the relationship

$$\tau = \frac{1}{2f}$$

compares favorably with previous correlations of τ for this type of injector.

III. CONCLUSIONS

1. The use of combustion chamber Mach number as a stability correlating factor was examined and was found to have a relatively minor effect which appears to be related to the sensitive frequency as follows:

$$f_s = 4550 \left(\frac{M_c}{d_i}\right)^{0.15} \frac{(P_c/P_{crit})^{0.33}}{F}$$

f_s	=	Sensitive frequency
M_c	=	Chamber Mach Number
d_i	=	Injection orifice diameter of least volatile propellant (inches)
P_{crit}	=	Critical pressure of least volatile propellant (psia)
P_c	=	Chamber pressure, (psia)
F	=	Function of the velocity ratio and impingement angle

2. For the annular chamber tests, all recorded high frequency instabilities were pure first tangential modes pulsed at a comparatively low shock level (20 grains). This indicates that, for the operating parameters, the combustion process was close to its spontaneous oscillation regime.

3. The incidence of pure modes rather than the mixed modes noted with previous tests with a cylindrical chamber indicates a higher value for the sensitive time lag (τ) and, correspondingly, a lower sensitive frequency value (since $\tau = \frac{1}{2f}$). This conclusion is logical when the annular chamber design is considered. Placing the centerbody in the injector has two effects: (1) the centerbody acts as an effective barrier against the radial modes, and (2) the integrated effect of propellant injection (mass distribution) is over larger radial distances -- or in a zone of greater tangential acoustic mode sensitivity.

III, Conclusions (cont.)

4. The fact that lower pulse charges triggered instability does not necessarily indicate a reduction in pressure interaction index (the sensitive time lag term, n). This apparent increased combustion sensitivity could be due to the fact that pure modes are initiated at lower n values than are the combined modes. In fact it is analytically theorized that the pressure interaction index, n, was approximately the same for both the cylindrical and the annular chamber coaxial injection test phases (that is equal to approximately 0.5).

5. The excitation chamber has potential as a stability rating tool which will give many inexpensive tests and will evaluate many single parameter characteristics of an injection pattern. A complete spectrum of frequencies can be evaluated; short duration tests are adequate to evaluate an injector. Injector modules are inexpensive and easily replaced; the removable chamber lid permits testing of long injection elements (i.e., tubelet or HIPERTHIN), servicing of the combustion chamber protective coating, and removal and replacement of wedge inserts.

6. It is recommended that dynamic high frequency transducers be flush mounted for proper wave description.

7. It is recommended that the transverse excitation chamber as a research tool be used extensively to evaluate the effect on combustion stability of the various injection parameters (i.e., injection velocities, velocity ratio, fuel temperature orifice chambers, injection distribution, etc.) on a variety of injection concepts (i.e., triplets, quadlets, coaxial, HIPERTHIN, etc.). These tests should serve as a single parameter variation test and should evaluate a range of design and test conditions to determine optimum operating conditions for combustion stability and performance for a given injector design.

III, Conclusions (cont.)

8. It is recommended that a limited number of verification tests be conducted using conventional cylindrical or annular combustion chambers to evaluate the injectors tested in the transverse excitation chamber in pulse rated stability tests. These tests should serve as demonstration tests to determine correlations between conventional injectors and excitation chamber results.

IV. EXPERIMENTAL TASKS

A. TEST APPARATUS

1. General

The stability characteristics of advanced injection concepts were evaluated on this program by two methods: full-scale annular thrust chamber assemblies and subscale single-parameter evaluations in a transverse excitation chamber. The ablatively cooled full-scale hardware was tested with a coaxial injector for an average test duration of 2.0 sec, developing a nominal thrust of 65,000 lb. Triplet injectors were also designed and fabricated for testing in the annular hardware. The subscale excitation chamber hardware was designed specifically to determine the frequency response characteristics of selected injection elements on a single design parameter variation basis. Because of particular design features of the excitation chambers, the thrust level was lower for the high-frequency testing (minimum 2000 lb) and higher for the lower frequencies (maximum 8000 lb). Figure 1 shows the full-scale annular hardware mounted on the test stand with the center body cone attached. Figure 2 shows the excitation chamber with the lid removed and one of the wedges installed. Detailed descriptions of each system and test hardware are given in the following paragraphs.

2. Full-Scale Annular Thrust Chamber Assembly

The full-scale annular thrust chamber assembly consisted of three major components: (1) injector with attached axial center body, (2) combustion chamber, and (3) annular nozzle. Hot gas joints on this assembly were sealed by thin Durabola gaskets placed between serrated sealing surfaces.

IV, A, Test Apparatus (cont.)

a. Injectors

Three injectors were designed and fabricated for the annular combustion chamber, and one was tested. The unit tested was a 54-element coaxial injector of the same element design as the 54-element coaxial injector tested in the 14.0 inch-diameter cylindrical hardware under NAS 8-11741. Seven pulse tests were conducted. A 600-element triplet injector was also designed and fabricated and is shown conceptually in Figure 3. It is rated at 60,000 lb thrust with 180 lb/sec total weight flow of propellant. A second triplet injector, using the same injection element design but containing only 200 triplet elements and delivering approximately 20,000 lb thrust with 60 lb/sec total weight flow of propellant, was also designed and fabricated. A conceptual drawing of this injector is shown in Figure 4.

(1) 54-Element Coaxial Injector

Testing of coaxial injectors on NAS 8-11741 and results from other test programs yielded data to permit evaluation of the size aspects of the coaxial element and the impinging versus nonimpinging patterns. The remaining parameter requiring evaluation was the effect of chamber Mach number and injection density. Using the same element design and impingement angle as used on the 54-element, the 14-inch-diameter cylindrical injector of last year's NAS 8-11741 contract permitted direct correlation between it and the annular high injection density injector parameters. A comparison of the 54-element cylindrical injector and the 54-element annular injector is shown in Table 1.

IV, A, Test Apparatus (cont.)

Design details for the coaxial injector fabricated on this task (Figures 5 and 6) and the design test condition used in computing the design data are shown in Table 2.

(2) High Injection Density Triplet Injector

The injector is composed of 600 triplet elements having an injection density of 3 lb/sec-in.^{2}. The triplet elements are drilled in a radial ray arrangement around an annulus conforming to the annular chamber envelope. There are 48 raised bars around the annulus. The fuel orifices are central and are located in the center of the raised bars. The two rows of oxidizer orifices on either side of the fuel bar are located 0.197 inches below the fuel orifice exit plane. The raised fuel bar has a truncated triangular cross section. The pattern and manifold arrangement are shown in Figure 3. The remaining high injection density triplet injector design parameters are listed in Table 2, for comparison with those of the low injection density triplet.

There is a provision for four baffles (one every 90 degrees) to protect the face from erosion by spinning tangential modes of instability. The baffles are held in place by bolts and are replaceable. The oxidizer orifices are fed by slots which receive propellant from a flooded annular back plate. Propellant is supplied to the annulus through eight holes connecting the annulus to the central oxidizer supply line. Fuel is fed to the orifices by 48 radially drilled holes which are supplied by an outer annulus. The annulus is filled by six tubes connected to the main fuel supply line.

(3) Low Injection Density Triplet Injector

The low injection density triplet injector has the same size orifices and element geometry as the above described injector. The flow rate, thrust and number of elements have been reduced by 2/3 that of the 600 triplet injector. The design of the two injectors is compared in Table 3.

IV, A, Test Apparatus (cont.)

The fuel orifices are fed by radial holes connected to an outer annulus. The annulus is supplied by six tubes connected to the main fuel line. The oxidizer orifices are fed by radially drilled holes which are plug welded at the outer circumference to prevent intermanifold leakage. The radial tubes are fed from an inner annulus by means of connecting holes. A central line supplies oxidizer to the annulus through eight equally spaced holes.

b. Chamber

An annular thrust chamber was used so that the chamber acoustic frequency would be in a suitable range while increasing the injection density. It also allowed the determination of combustor configuration effect on combustion stability. Information obtained for a previous program (Contract NAS 8-11741) allowed determination of the effects of a cylindrical chamber on combustion stability using a comparable coaxial type injector element at lower injection density. The annular chamber was assembled by placing a flanged cylinder over the center body attached to the injector. The chamber was kept cool by the use of 1/2-inch-thick ablative sleeves on both the outer and inner diameters of the annulus. The chamber can be seen assembled on the test stand in Figure 1. The internal chamber dimensions are as follows:

Chamber inside diameter	=	10.50 in.
Center body outside diameter	=	6.14 in.
Chamber effective length	=	15.25 in.

Two igniters, three pulse guns, eight high-frequency transducers, and three static pressure transducers are located on the combustion chamber as shown in Figure 7.

IV, A, Test Apparatus (cont.)

The chamber and center body ablative liners made a smooth transition into an ablative annular throat by using nozzle inserts held in place by flanged housings. Chamber pressures of 1500 and 2500 psia were obtained by maintaining a constant flow rate and changing the throat area. The center body throat diameter remained constant; the throat diameter of the insert attached to the outer chamber nozzle housing was varied to achieve two chamber pressures. A center body nozzle extension of graphite was used to attain a uniform expansion with minimum nozzle losses, thereby providing accurate performance measurements. A photograph of the chamber and nozzle mounted on the test stand viewed from the nozzle end is shown in Figure 1. The pertinent nozzle design parameters are outlined in Table 4.

3. Transverse Excitation Chamber

The concept of a transverse excitation was originated at Aerojet on a Company-Sponsored Independent Research and Development program to study transverse modes of pressure oscillation (tangential instabilities) and simulate the pressure/velocity effects as experienced in a rocket combustion chamber. The transverse excitation chamber tested on this program is described in the following paragraphs.

a. Injectors

Two triplet element patterns were designed and fabricated for testing in the transverse excitation chamber. One was an 11-element triplet, and the other was a three-element triplet similar to the 11-element triplet design in all but the orifice diameters. The purpose of the larger orifice size was to determine the effect of orifice diameter or thrust per element on combustion stability. Only the 11-element injector inserts were tested during Phase I. A conceptual drawing of the two injectors is shown in Figure 8. A summary of the injector design features is listed in Table 5.

IV, A, Test Apparatus (cont.)

The injector inserts are interchangeable modules that offer fabrication economics and test program versatility. Injectors that would not fit into the 1.8-in.-diameter bore can be inserted from the lid side, then connected to the manifold. The inserts are sealed by two O-rings seated in circumferential grooves. A port at the base of the insert allows insertion of a fast response thermocouple to monitor fuel manifold temperature.

b. Combustion Chamber

The excitation chamber consisted of three principal parts: (1) chamber, (2) nozzle, and (3) injector inserts. The chamber is a 36° sector of a circle 2-1/4 inches in height. A drawing of this chamber is shown in Figure 9. The 36° sector of the 30-inch radius results in a fundamental acoustic frequency in the transverse mode at 1800 Hz. The smallest chamber angle was 9°, which results in a chamber acoustic frequency of 7000 Hz. The height of the chamber (2.17 in.) limits the associated acoustic frequency to greater than 13,000 Hz.

Originally, the variation in frequency was to be obtained by varying the chamber length to determine acoustic amplitude growth or decay rate for various chamber frequencies. Test results from an Aerojet Independent Research and Development program indicated that chamber losses, the relationship of the combustion distance to the acoustic field amplitude, and the physical location of the pulse gun to the combustion front greatly affected the response characteristics of the multiple-length (36° included angle) combustion chambers. To overcome the disadvantages of multiple-length combustion chambers, a single chamber 30 in. long and having a 36° included angle was used. The frequency of the acoustic mode was varied by changing the angle in the chamber, using various wedges inside the chamber to block part of the combustion zone. Undrilled blank injector inserts seal the injector bores blocked by the wedge. The frequencies associated with the wedges and the included chamber angle are listed in Table 6.

IV, A, Test Apparatus (cont.)

The O-ring sealed chamber lid is removable to facilitate repairs and inspection. The combustion chamber wall was protected by a flame sprayed zirconium oxide coating 0.020 to 0.040 in. thick.

Ablative liners were bonded to the chamber with room-temperature vulcanizing silicone rubber RTV-60. They were located in the nozzle end of the chamber and covered half of the distance between the nozzle and injector face. The liners served to protect the steel from the hot erosive combustion products and were used only in the nozzle end to avoid acoustic losses due to the highly absorptive ablative material.

The nozzles are composed of a housing and ablative inserts. The nozzle throat and exit planes are rectangular in section to avoid transition pieces. The outside envelope of the nozzle insert is cylindrical with the exception of a molded key. The nozzle ablative insert is designed to be made from a common mold and is bonded into the nozzle housing using RTV-60. The housing, in turn, is bolted onto the chamber and sealed by an O-ring. The throat width for each of the eight nozzles is shown in Table 7.

IV, Experimental Tasks (cont.)

B. TEST PROCEDURE

The 60K thrust annualr chamber tests were conducted on the C-6 test stand and the subscale (excitation chamber) tests were conducted on test stand J-1.

A total of 13 tests were conducted for this investigation; seven were made using the 60K annular thrust chamber and coaxial injector hardware. The other six tests were performed on the transverse excitation chamber. These latter tests used a triplet injector pattern (O-F-O). High-frequency data were satisfactorily recorded on all valid tests.

Both series of tests were designed to operate at nominal mixture ratios of from 4 to 6 and at velocity ratios of from 3.5 to approximately 10. Chamber pressures of 1500 and 2500 psia were to be attained on the TCA tests, whereas facility limitations dictated a maximum excitation chamber pressure in the 1500 psi range.

During the steady-state portion of each test, perturbations were introduced into the chamber in an attempt to disturb the combustion process. Three pulses (20, 40, and 80 grain charges) were used for the annular chamber tests; a 40-grain pulse was used to perturb the excitation chamber tests.

1. Full-Scale Testing (60K Annular Chamber)

a. General

The duration of all tests was scheduled for 2 seconds. Three pulse charges were fired at 100 millisecond intervals. The 2-second duration allowed pulsing to take place during the last portion of the test so that a reliable value for specific impulse (I_s) could be determined from data during

IV, B, Test Procedure (cont.)

the early part of the test. Sufficient high frequency, low frequency, and static instruments were used to establish the thermodynamic properties of the propellants and the combustion characteristics within the chamber.

b. Test Stand

An isometric drawing of test stand C-6 is shown in Figure 10. A picture of the test stand showing the intensifier layout can be seen in Figure 11. The intensifiers are a positive expulsion device which allows the propellants to be supplied to the engine at high pressure using a relatively low pressure inert gas. The pressure is intensified by amplifying force through an in-line axial piston having a large diameter gas input and a small diameter propellant output. The intensifier's output is 6000 psi from an input of 1700 psi. The propellant capacity of the oxidizer and fuel intensifiers is 80 and 250 gallons, respectively. The intensifier piston is restricted from traveling the full distance to avoid damaging the head end.

The amount of propellant flowing to the engine was regulated by a servo control system. The function of the servo is to adjust the opening of the flow control valve upstream of the injector to maintain a preset manifold pressure that is input to the servo system by the transducer measuring injector pressure. An orifice is provide in each propellant line downstream of the flow control valve. The orifice functions to decouple low-frequency instabilities initiated in the feed lines. The engine is held immobile by the stand structure, designed to withstand a maximum reaction thrust of 100,000 lb.

c. Chill and Fill Procedure

Hydrogen propellant consumption was minimized by a combination of a vacuum jacket, which acts as insulation, and a LN_2 heat exchanger wrapped around the propellant end of the intensifier. Liquid nitrogen was

IV, B, Test Procedure (cont.)

flowed through the tubes until a temperature of 140°R was monitored. At that time, the LN_2 was then purged from the heat exchanger tubes and liquid hydrogen introduced through the vacuum-jacketed run lines to the intensifier until the system reached liquid hydrogen temperature (∿35°R). The LH_2 temperature was monitored at the intensifier vent, the system was considered chilled down, full, and ready for testing. Oxidizer was serviced in a similar manner as the fuel by first filling through the insulated propellant lines, then topping off propellant through the intensifier vent.

The injector was prechilled by flowing LN_2 through the fuel circuit downstream of the thrust chamber flow control valve. Temperature was monitored at the injection orifice by high response thermocouples; when LN_2 temperature was detected, the system was considered sufficiently chilled.

Gaseous hydrogen (200°R) was obtained by filling the intensifier with a predetermined amount of LH_2, then injecting gaseous hydrogen from an auxiliary supply. The mixture of gaseous and liquid hydrogen was then allowed to reach thermal equilibrium before firing.

To produce a smoother start and reduce the possibility of ignition spikes (overpressures), the oxidizer and fuel propellant valves were programed to produce an oxidizer-rich mixture ratio.

d. Test Sequence

The test firing countdown was started after the fill and chill had been completed. A test duration of 2 seconds was scheduled for each test. The test duration time is defined as the interval between FS-1 and FS-2. Fire switch one (FS-1) was operated manually, initiating timers which sequenced valves, igniters, pulse guns, and FS-2. Ignition was accomplished by two

IV, B, Test Procedure (cont.)

pyrotechnic igniters which had burn durations of 0.75 sec at 14.7 psi. The start was oxidizer rich to reduce the possibility of ignition spikes (over-pressures). The start was accomplished by programing the oxidizer and fuel propellant valve opening times and rates so that, as soon as the valves reached approximately 80% of the scheduled full-open position, the servo controller system was activated. The smooth transition into steady-state operation was verified by the record shown in Figure 12. The three pulse guns were fired at 0.10 second intervals starting at 1.6 seconds. An indication of the steady-state specific impulse could be obtained from test data before the time the pulse guns fired. Fire Switch Two (shutdown) could be activated by any one of five methods:

(1) Thrust chamber pressure switch
(2) Combustion stability monitor
(3) Oxygen or full 70% limit switch
(4) Duration timer
(5) Manual override

The sequencer FS-2 command resulted in the opening of all bleeds and vents (except run tank vent) and the closure of all other valves. Purges were opened manually prior to FS-1 and were checked by system pressure until system pressure decayed to a predetermined level, at which point they began to flow until closed manually.

e. Instrumentation

A schematic of the C-6 test stand flow and instrumentation diagram is shown in Figure 13. The instrumentation used to monitor engine high-frequency fluctuations and their location is shown in Figure 7. The types of instrumentation used are discussed below.

IV, B, Test Procedure (cont.)

(1) Pressure Measurement

There are eight Model 352A Photocon pressure transducers located in the chamber wall. The transducers are located in three axial planes and four circumferential positions. The locations allow determination of the phase, amplitude, and damping rate of pressure waves in the chamber. Planes A, B, and C are located at distances of 4.625, 7.925, and 12.125 inches from the injector face, respectively. All three planes had transducers located at 30 and 120° from top dead center. In addition, Plane A had two located at 210 and 270° from top dead center. The transducers were mounted within 0.100 inch of the half-inch ablative liner, as shown in Section A-A of Figure 7. Five orifices drilled through the 1/2-inch thick ablative liner at each Photocon location allowed chamber pressure oscillation to be sensed. Pressure perturbations were introduced by firing two pulse charges through ports in the chamber wall, which were aimed tangential to the center body diameter. The location of the ports is shown in Figure 7.

Static pressure transducers were located in the injector inlet lines to measure injector pressure. Static chamber pressure transducers were used to measure chamber pressure at three locations on the chamber; at the injector face and 4.62 and 7.925 in. from the face.

(2) Temperature Measurement

A platinum resistive temperature transducer and high-response copper-constantan (C-C) thermocouples were used to monitor propellant temperature at the injector entrance. Copper-constantan thermocouples were also located in the fuel manifold to monitor temperature prior to injection. The rate of volumetric displacement of propellant in the intensifiers was determined by means of a potentiometer attached to the intensifier piston shaft. The density of the propellant was obtained from appropriate equations of state. Flow rate was then calculated as the product of time rate of change of intensifier volume and propellant density.

IV, B, Test Procedure (cont.)

2. Excitation Chamber Testing

a. General

The duration of all tests was scheduled for 0.8 to 1.5 sec. A single pulse charge was fired at 50 milliseconds prior to FS-2. Sufficient high frequency, low frequency, and static instruments were used to establish the thermodynamic properties of the propellants and the combustion characteristics within the chamber.

b. Test Stand

The excitation engine was tested on Test Stand J-1. A picture of the engine mounted on the stand is shown in Figure 14 and a schematic flow and instrumentation diagram for Test Stand J-1 is shown in Figure 15. Propellant was supplied to the engine by means of an 80-gallon oxidizer intensifier and a 100-gallon-capacity pressurized fuel tank. The oxidizer intensifier (propellant end only) and run lines were glass fiber insulated. The fuel tank and run lines were vacuum jacketed to prevent excessive heat loss. The oxidizer intensifier is similar in construction and operation to the one used for full-scale tests, as described in Section III,B,1,b. The spherical fuel tank had a 3500-psi upper pressure limit and was pressurized by hydrogen gas supplied from a cascade. A steady flow rate was maintained by servo control, shown schematically in Figure 15. The servo system controlled flow rate by adjusting the flow of the pressurizing gas into the fuel tank and oxidizer intensifier to provide a constant set pressure at the thrust chamber valves. An orifice was located just downstream of the oxidizer valve to decouple low frequency instabilities associated with the feed lines. The fuel tank pressure rating of 3500 psi precluded placement of an orifice in the fuel side since the sum of the chamber and injector pressure drops nearly equaled the total available head. The stand mount was designed for 100,000 pounds of thrust and could, therefore, easily accept the 2000 to 8000 pound thrust the excitation chamber could deliver.

IV, B, Test Procedure (cont.)

c. Chill and Fill Procedure

The two systems were chilled down by introducing the propellants into their respective tanks until liquid conditions were monitored in the vent stack. Vacuum jacket intensifier and run lines and an insulated oxidizer propellant system prevented excessive propellant consumption by reducing heat losses. The fuel manifold was cooled externally by a LN_2 jacket.

d. Test Procedure

There were only minor differences between the excitation and full-scale engine test procedures discussed in Section III,B,1,d. A test duration of 0.750 seconds was established after Test -002. The short duration was to minimize hardware damage. The shutdown parameters were the same as for the full-scale engine except for the combustion stability monitor (CSM). The shortness of the duration made a CSM function needless since the oxidizer and fuel valve closing times were of the same order of magnitude as the duration. The oxidizer valve was opened first, followed by the fuel valve opening, to result in an oxidizer lead so that chamber overpressure could be avoided. A start transient of a typical test is shown in Figure 16.

The single 10-grain pulse gun was fired at FS-2. By so doing, a spontaneous instability would be allowed, and the time that elapsed while the valves closed was sufficient to determine decay or growth values.

e. Instrumentation

The parameters necessary to evaluate the experimental characteristics to determine the combustion stability of advanced injectors included propellant flow rate, pressure, temperature, and amplitude and frequencies of chamber pressure oscillations. A schematic of the J-1 test stand flow and instrumentation is shown in Figure 15.

IV, B, Test Procedure (cont.)

(1) Pressure Measurement

There was one Model 352A Photocon transducer located in the chamber wall and one located in the chamber lid. Both transducers were located approximately 1-1/2 inches from the injector face, and the water-cooled face of the transducer was flush with the combustion chamber wall. The Photocon transducers were used to measure oscillatory pressure. Pressure perturbations were introduced by firing a 10-grain pulse charge into the combustion chamber using a squib-initiated Mod V pulse gun. The location of the pulse gas ports are shown in Figure 9.

Static pressure transducers were used to measure injector pressure. Two static chamber pressure transducers, connected in parallel, were located approximately 1 in. from the injector face and were used to measure chamber pressure.

(2) Temperature Measurement

A platinum resistive temperature transducer and a high-response copper-constantan (C-C) thermocouple were used to monitor propellant temperature at the injector entrance. Six fast response C-C thermocouples were located in the fuel manifold to monitor temperature prior to injection.

(3) Flow Measurement

The rate of volumetric displacement of oxidizer in the intensifier was determined by a potentiometer attached to the intensifier piston. Oxidizer flow rate was then calculated as the product of intensifier volumetric time rate of change and propellant density. Fuel flow rate was measured with a turbine-type flowmeter. A schematic of the instrument locations is shown in Figure 15.

IV, Experimental Tasks (cont.)

C. TEST RESULTS

1. Annular Thrust Chamber

A total of 7 tests were conducted with the annular thrust chamber using the coaxial injector pattern (Figure 5).

Each instability pattern observed during the annular testing was nearly identical in its form and was initiated by the 20-grain charge, using a tangential pulse gun. The peak-to-peak overpressures of these instabilities ranged from 800 to 2000 psi. The frequency was approximately 2500 Hz, depending on the acoustic velocity value for each test condition.

Test No. 7, using 200°R hydrogen, experienced--in addition to its high-frequency instability--a low-frequency (500 Hz) oscillation which attained an amplitude of 750 psi. Except for one brief occurrence of a low-frequency (100 Hz and 100 psi) instability on Test No. 3, there was no other indication of coupling between the feedlines and the combustion process. It should be pointed out that the large pressure drops across the injector face due to the small orifice design result in significant hydraulic resistances in the circuit.

Though the amplitudes of the higher frequency instabilities were large, there was no evidence of erosion taking place across the injector face which was protected by a ZrO_2 coating. The ablative liner of the chamber did exhibit a "scallop" effect around its periphery approximately 2 to 3 inches down from the injector face. The orifices in the heat shield on the high-frequency transducers were partially plugged by the molten ablative material; however, the data recorded by the transducers were not seriously compromised. The eight transducers spaced around the chamber indicate the instability was a standing first tangential mode.

IV, C, Test Results (cont.)

In addition to pressure data, a thorough temperature distribution was made across the entire feed system. Six high-response thermocouples were placed in the fuel circuit at the point of injection into the chamber to allow accurate density values to be calculated. These values were then used to determine the propellant injection velocity from the measured flow rates. Temperature measurements were also made in the manifolds, propellant lines, and into the intensifier using both high-response thermocouples and resistance temperature transducers.

Flow measurement data were improved over last year's program. Two devices were installed on both the oxidizer and fuel intensifiers to measure piston velocities. One device, a rotary potentiometer spool, gave good data on the fuel circuit but inconsistent results on the oxidizer side. This is due to the larger displacement of the fuel piston (6 to 8 feet) versus approximately 2 feet of oxidizer piston travel, giving greater sensitivity to displacement measurement errors. A second experimental velocity measuring device consisted of a slider mechanism riding along a calibrated wire and yielding an analog output signal. Data from it were sporadic but nonetheless did, at times, closely correlate with the rotary potentiometer.

As a check on both types of devices, analytical calculations were made using the temperature data, feed system pressure drops, and experimental hydraulic resistance values.

The major difference in this year's test program versus the Phase II work on Contract NAS 8-11741 was the use of higher chamber Mach number resulting from the use of an annular chamber (e.g., lower contraction ratio). Two Mach numbers were used, 0.176 and 0.29 (vs a previous range of 0.02 to 0.14), to define the correlative effect of this parameter.

IV, C, Test Results (cont.)

Combined modes were common in the Phase II testing; however, only pure first tangential modes were recorded in the current testing. All unstable tests exhibited high peak-to-peak amplitudes ranging from 40 to 90% of chamber pressure, each being triggered by the 20-grain pulse charge. The initial pressure wave resulting from this charge varied considerably (100 to 1000 psi) from test to test, yielding the same random spread as seen on the Phase II testing (Figures 17 and 18).

Referring to Figures 19 and 20, the mixture ratio vs velocity ratio plots, it may be seen that the unstable points fell within the spontaneous instability zones plotted from last year's work. Due to the limited number of tests fired, this could signify either a rightward shifting (higher MR) of the stability zones or a larger pulsed instability zone. It should be noted that, since the annular chamber instabilities were triggered by a small charge (20 grain), the combustion sensitivity was close to its spontaneous zone. Forty to sixty grains were needed in the Phase II testing to trigger the instabilities.

The following correlation equation was obtained from an analysis of the LOX/LH_2, coaxial injection test data obtained by AGC (NAS-8-11741, Phase II), PWA, and LeRC. From the multitude of design and performance parameters available, six variables were selected which, from empirical results, could best be correlated to the observed high frequency instability, f_s.

The Mach number (e.g. mean chamber gas velocity) and the orifice diameter, d_i, of the least volatile propellant were found to have an effect approximately proportional to the 1/7 power.

Chamber pressure was related to the sensitive frequency by the 1/3 power in cases when its value was lower than the vaporization pressure of oxygen. Increasing the pressure above this value did not directly effect the frequency.

IV, C, Test Results (cont.)

The test results also correlated the velocity ratio and the impingement angle to the sensitive frequency. Physically, a high degree of droplet breakup caused both by a large absolute fuel velocity and it's respective radial component directed normal to the central (oxidizer stream) would result in a shorter time lag, τ, (e.g., higher frequency, f_s). A large central oxidizer velocity would act to resist this breakup causing the opposite effect (larger τ and lower frequency) to occur.

The intent of this year's annular chamber/coaxial injector program was to validate the effect of Mach No. by treating larger values (0.176 and 0.29).

This verification of the Mach number as an important correlating parameter, together with the results of Phase II testing and the work of LeRC, has led to the following correlation equation:

$$f_s = 4550 \left(\frac{M_c}{d_i}\right)^{0.15} \frac{(P_c/P_{critical})^{1/3}}{F}$$

f_s	= Sensitive frequency (Hz)
M_c	= Chamber Mach number
d_i	= Injection orifice diameter of least volatile propellant, inches
$P_{critical}$	= Critical pressure of least volatile (time controlling) propellant, psia
P_c	= Chamber pressure, psia
F	= Function of the velocity ratio and impingement angle. This function is not defined for the nonimpinging showerhead coaxial element. (Figure 21).

IV, C, Test Results (cont.)

This formula may be used by a designer in his preliminary work to develop an injector configuration whose sensitive frequency is displaced from the first tangential acoustic mode of the thrust chamber. These first order estimates may then be combined with the analytical results of the sensitive time lag computer program to obtain a more detailed engine configuration. Of prime importance is the overall trends which may be observed from changes in any of the six design parameters. An example problem using the above equation to make both a preliminary and final design study is presented in Section V, Application of Results.

Admittedly further testing and research into the physico/chemical kinetics of high chamber pressure/LO_2-H_2 combustion may lead to the correlation of additional parameters and/or an adjustment (exponential) of each term. Also certain parameters may only be correlative over a definite range (much as chamber pressure appeared to have an effect only when below oxygen's vaporization pressure).

2. Transverse Excitation Chamber

This series of tests was conducted to demonstrate the capability of the excitation chamber to characterize injector elements. This type of information is needed to rate stability of a particular injector design and/or a variation of operating conditions.

Mixture ratios of around 4 and chamber pressures of 1300 to 1400 psi were evaluated during the test series. Two of the three valid tests (three tests had an inoperative fuel valve) attained these conditions and both experienced spontaneous instabilities. One test exhibited a growth rate of 650 db/sec, while the other test had two distinct growth periods. The first, occurring at the onset of the instability, had a 600 db/sec rate, while the second growth period came after thermal ignition of the 40 grain pulse charge had disrupted the initial instability. Its growth rate was 330 db/sec.

IV, C, Test Results (cont.)

Pressure, temperature, and flow rate measuring devices all gave satisfactory data. Some damage to the high-frequency pressure transducer was caused by the instability; however, it did not invalidate the data.

Tables 9 and 10 summarize the recorded valid performance data together with the stability results.

From the data obtained, the indication is that over the frequency range of 3000 to 4500 Hz the triplet element shown in Figure 3 has a peak response at 3300 Hz (see Figure 22) at the specified steady state conditions. This peak response frequency, when related to τ by the relationship

$$\tau = \frac{1}{2f}$$

compares favorably with previous correlations of τ (Figure 23) for this type of injector. This correlation was developed during Phase II of Contract NAS 8-11741.

V. ANALYTICAL TASKS

A. ANNULAR THRUST CHAMBER ANALYSIS

1. Annular Combustion Chamber

The analysis for annular combustion chambers fits into the basic framework of the cylindrical chamber analysis with only a minor modification. This modification is the direct result of a boundary condition at the inner wall of the annular chamber. A brief description of the analysis is contained in the following paragraphs.

In the solution of the characteristic equation for the cylindrical chamber, the pressure perturbation, P', was solved by assuming a solution of the infinite series form

$$P' = P_o + P_1 + P_2 + \ldots P_n$$

Using an order of magnitude analysis on the general perturbation equations permitted the separation of the general equations into equations for P_o, P_1, etc., where it was assumed that $P_1 = 0\ (P_o \cdot u_e)$--that is, one order of magnitude less than P_o by virtue of the product of P_o and the steady state Mach number u_e--$P_2 = 0\ (P_o \cdot u_e^2)$, and $P_n = 0\ (P_o \cdot u_e^n)$. The solution for P_o considered terms of 0(1) with the result that P_o represents the solution of the acoustic equations in a no flow, no combustion system.

The P_o equations were solved by using the separation of variables technique:

$$P_o = P_o(Z)\ \psi_o(r)\ \Theta_o(\theta) \qquad (1)$$

V, A, Annular Thrust Chamber Analysis (cont.)

and resulted in three ordinary differential equations for

$$P_o(Z),\ \psi_o(r),\ \text{and}\ \Theta_o(\theta).$$

The modification to the cylindrical chamber analysis imposed by the annular analysis presents itself in the solution of $\psi_o(r)$. The discussion hereafter will be concerned with $\psi_o(r)$.

The differential equation for $\psi_o(r)$ is the classic Bessel equation which results in the following general solution:

$$\psi_{\nu\eta}(r) = C_1 J_\nu\ (S_{\nu\eta}\ .\ r) + C_2 Y_\nu (S_{\nu\eta}\ .\ r) \qquad (2)$$

where J_ν is the Bessel function of the first kind, Y_ν is the Bessel function of the second kind, and $S_{\nu\eta}$ (where ν specified the order of the Bessel equation) is the transverse acoustic mode number. Specifically, this means that at all chamber walls

$$\frac{d\psi_\nu}{dr} = 0$$

Applying this condition to (2) yields

$$\psi_\nu' = 0 = J_\nu'\ (S_{\nu\eta}\ .\ r_c) + \frac{C_2}{C_1}\, Y_\nu'\ (S_{\nu\eta}\ .\ r_c) \qquad (3)$$

at the outer wall, $r_c = 1$, equation (3) reduces to

$$J_\nu'\ (S_{\nu\eta}) + \frac{C_2}{C_1}\, Y_\nu'\ (S_{\nu\eta}) = 0 \qquad (4)$$

V, A, Annular Thrust Chamber Analysis (cont.)

For the cylindrical chamber case, equation (4) reduces to

$$J'_\nu (s_{\nu\eta}) = 0 \qquad (5)$$

since B must be zero because Y_ν becomes infinite at r = 0. The solution of equation (5) serves to define the transverse acoustic mode number, $S_{\nu\eta}$, for cylindrical combustion chambers.

The annular chamber has its inner wall located in the range 0 R' 1. Therefore, for the inner wall, equation (3) is written.

$$J'_\nu (S_{\nu\eta} \cdot R') + \frac{C_2}{C_1} Y'_\nu (S_{\nu\eta} \cdot R') = 0, \text{ @ } r = R \qquad (6)$$

whereas at the outer wall, r = 1 and equation (4) is still applicable. Solution of (4) and (6) simultaneously yields

$$J'_\nu (S_{\nu\eta}) Y'_\nu (S_{\nu\eta} R') - J'_\nu (S_{\nu\eta} R') Y'_\nu (S_{\nu\eta}) = 0 \qquad (7)$$

The solution of equation (7) defines the transverse acoustic mode number, $S_{\nu\eta}$, for annular chambers. Fortunately, equation (7) has been solved in Reference (29) and the values of $S_{\nu\eta}$ are listed as a function of R' where $R' = R_i/R_o$ on Table 11.

Thus the use of an annular chamber will alter the frequencies of the transverse modes. The extent of the alteration is illustrated in Figure 24. In addition, radial injection distribution effects will be minimized by the use of the annular chamber so that in most cases the distribution coefficients $A_{\nu\eta}$, $B_{\nu\eta}$, and $C_{\nu\eta}$ can be assumed as unity.

V, A, Annular Thrust Chamber Analysis (cont.)

2. Annular Exhaust Nozzle

The configuration of the exhaust nozzle effects the nozzle admittance coefficients that are used in the boundary condition imposed by the analysis at the chamber/nozzle interface.

The annular exhaust nozzle analysis does not differ significantly from the cylindrical nozzle analysis. The only difference is in the determination of the local contraction ratio as a function of the z-coordinate for input into the isentropic relationship

$$\frac{A(Z)}{A_{th}} = \frac{1}{u(z)} \left[\frac{2}{\gamma+1} \{1 + \frac{\gamma-1}{2} u^2(z)\} \right]^{\frac{\gamma+1}{2(\gamma-1)}}$$

to define the local Mach number, u(z). This is accomplished in the computer program by specifying the inner and outer radii of the annular chamber and throat. A detailed discussion of the computer model which includes the annular chamber analysis can be found in Appendix B.

V, Analytical Tasks (cont.)

B. STAGED COMBUSTION MODEL

The high frequency staged-combustion stability analysis has been completed for the simplified engine system in which the effects of oscillations on liquid propellant injection rates are neglected. The oscillatory flow of fuel-rich combustion products from the primary combustor is included, and provides the dynamic coupling between the two combustors. The simplified analysis is directed toward the study of these coupling effects. In the first version of the analysis, complications which have been studied previously--such as axially distributed combustion and exhaust nozzle shape--are not considered. Similarly, to bring out the coupling effects more clearly, the turbine is replaced by a simple orifice. All of these features can be added to the model, but introduce complications that will obscure the results.

The system considered is represented schematically in Figure 25. The approach taken to the solution is to assume that the engine design parameters are given. Then instability zones are calculated for the secondary combustor, for assumed values of the primary combustion parameters (n_p, τ_p), and for the total time lag of the hot gas τ_{fs}. The shift of the instability zones as these combustion parameters are varied shows the nature of the interaction between the two combustors. An alternative approach would be to solve for the instability zones for the primary combustor, assuming values of the secondary combustion parameters. A closed-form solution is impossible because of the presence of a set of simultaneous, nonlinear, algebraic equations, requiring an iterative solution.

For purpose of analysis, the engine system can be divided into four parts: (1) the propellant feed system, (2) the primary combustor, (3) the secondary combustor, and (4) the turbine. The first-order analysis involves the following assumptions: the propellants are incompressible, the feed

V, B, Staged Combustion Model (cont.)

lines are very short, the combustion is concentrated at the injector end of each combustor, and the mean chamber Mach numbers are small. Although there are many significant interactions between low and high frequency types of instability, initially the two will be treated separately.

To simplify the analysis it is assumed that the Mach number of the mean gas flow through the combustion chambers is small, that the perturbations of all flow properties about their steady-state values are small, and that the combustion is concentrated at the injector face. Then the perturbations are governed by the linear wave equation:

$$\frac{d^2}{dz^2}\left(\frac{P'}{\bar{P}}\right) - \frac{s^2}{c^2}\left(\frac{P'}{\bar{P}}\right) = 0 \qquad (8)$$

where the unsteady pressure is of the form $P(z,\tau) = \bar{P} + P'(z)e^{s\tau}$

The boundary condition at the injector face, that is at the downstream side of the combustion front, can be written as

$$\frac{u'}{\bar{u}} + \frac{P'}{\bar{P}} = \frac{R}{R+1}\,\frac{\dot{m}_x}{\bar{\dot{m}}_x}\,e^{-s\tau_x} + \frac{1}{R+1}\,\frac{\dot{m}_f'}{\bar{\dot{m}}_f}\,e^{-s\tau_f} + n(1-e^{-s\tau})\,\frac{P'}{\bar{P}} \quad (\text{at } z = 0) \qquad (9)$$

At the chamber exit, the boundary condition can be written in terms of an admittance coefficient:

$$\frac{u'}{\bar{u}} = \alpha\,\frac{\rho'}{\bar{\rho}}, \quad \text{at } z = L \qquad (10)$$

where α is the complex, dimensionless admittance coefficient, which determines the phase and amplitude of the wave reflection. For $\alpha = 0$, the reflection is that from a solid wall; $\alpha = 1$ corresponds to no reflection (waves propagating

V, B, Staged Combustion Model (cont.)

downstream only); and $\alpha = \infty$ corresponds to reflection from an open end, at which the pressure is kept constant. For rocket chambers, α lies between 0 and 1, and for short, supercritical nozzles, $\alpha = \frac{\gamma-1}{2}$. In general, α is dependent on both nozzle geometry and frequency.

The injector boundary condition includes both propellant feed and combustion dynamic response contributions. For generality, each of the bipropellants is assumed to have its own total time lag τ_t. However, if the propellants are well mixed in the process of injection, a better assumption would be a common total time lag. For simplicity, in the high frequency response of the combustion, a single sensitive time lag is assumed, since the processes involved are more likely to occur after the propellants have been mixed. The form of the combustion response is that developed by Crocco, in which the parameters are the sensitive time lag τ, which is related to the frequencies at which oscillations can occur, and the interaction index n, a measure of the magnitude of the combustion response to a disturbance.

The general solution of equation (8) is

$$\frac{P'}{\bar{P}}(z) = C_1 e^{\frac{sz}{c}} + C_2 e^{-\frac{sz}{c}} \tag{11}$$

for which the velocity perturbation is given by

$$\frac{\gamma u'}{\bar{u}}(z) = C_2 e^{-\frac{sz}{c}} - C_1 e^{\frac{sz}{c}} \tag{12}$$

Substituting these expressions into the boundary conditions, equations (9) and (10), yield the combustion chamber equation

$$\bar{u} - \bar{u}\gamma(F + \hat{P}) = \frac{1 - B e^{\frac{2sL}{c}}}{1 + B e^{\frac{2sL}{c}}} \tag{13}$$

V, B, Staged Combustion Model (cont.)

where

$$F = \frac{R}{R+1}\ \frac{\bar{P}}{\bar{\dot{m}}_x}\ \frac{\dot{m}'_x}{P'}\ e^{-s\tau_x} + \frac{1}{R+1}\ \frac{\bar{P}}{\bar{\dot{m}}_f}\ \frac{\dot{m}'_f}{P'}\ e^{-s\tau_f} \qquad (14)$$

$$\text{and} \qquad B = \frac{1+\alpha\bar{u}}{1-\alpha\bar{u}}\ , \qquad \hat{P} = n\ (1-e^{-s\tau})$$

In considering the feed system effects it is convenient to make use of a flow admittance, G, defined by

$$G = \frac{\dot{m}'}{P'}$$

For incompressible flow, and assuming that the feed lines are very short, the admittance at the downstream end of a feed line, G_2, can be expressed in terms of the admittance at the upstream end, G_1, by the relation

$$G_2 = \frac{G_1}{1-Z_1\ G_1}$$

where $Z_1 = 2\ (\overline{P_1-P_2})\ /\ \bar{\dot{m}}$. If the line originates in a propellant tank, the equation simplifies to

$$G_2 = -\frac{1}{Z_1} = -\frac{\bar{\dot{m}}}{2\overline{\Delta P}}$$

for cases in which the lines are too long to neglect wave effects, or the propellant compressibility must be considered, the relation between the admittances becomes much more complicated and is dependent on frequency. Such complications, which can have a significant influence on the stability, will be introduced into the analysis at a later time.

A schematic diagram of a simplified staged-combustion engine is shown in Figure 25. For the present, we consider the turbine to be a short length of line with a pressure drop, with an admittance coefficient at the entrance α_p, to be specified. Applying the combustion chamber and feed line relations to the components of the engine system results in the following set of simultaneous equations:

V, B, Staged Combustion Model (cont.)

Initial feed line sections:

$$G_{fp} = -\frac{1}{Z_f} = -\frac{\bar{\dot{m}}_f}{2\Delta P_f}$$

$$G_{x1} = -\frac{1}{Z_{x1}} = -\frac{\bar{\dot{m}}_x}{2\Delta P_{x1}}$$

At the tee in the oxidizer line:

$$G_{x1} = G_{x2} + G_{x3}$$

Primary combustor injector:

$$G_{xp} = \frac{G_{x2}}{1-Z_{x2}\,G_{x2}}$$

Primary combustor:

$$\bar{u}_p - \gamma\bar{u}_p\,(F_p + \hat{P}_p) = \frac{1 - B_p e^{\frac{2sL_p}{c_p}}}{1 + B_p e^{\frac{2sL_p}{c_p}}}$$

$$F_p = \frac{\bar{P}_p}{\bar{\dot{m}}_p}\,[G_{xp}\,e^{-s\tau_{xp}} + G_{fp}\,e^{-s\tau_{fp}}]$$

$$\hat{P}_p = n_p\,(1-e^{-s\tau_p})$$

V, B, Staged Combustion Model (cont.)

Turbine inlet:

$$G_{pe} = \frac{\bar{\dot{m}}_p}{\gamma \bar{P}_p} (1+\alpha_p)$$

where $\bar{\dot{m}}_p = \bar{\dot{m}}_{xp} + \bar{\dot{m}}_{fp}$

Secondary combustor injector:

$$G_{fs} = \frac{G_{pe}}{1-Z_t\, G_{pe}}$$

$$G_{xs} = \frac{G_{x3}}{1-Z_{x3}\, G_{x3}}$$

Secondary combustor:

$$\bar{u}_s - \gamma \bar{u}_s [F_s + P_s] = \frac{1 - B_s\, e^{\frac{2sL_s}{c_s}}}{1 + B_s\, e^{\frac{2sL_s}{c_s}}}$$

$$F_s = \frac{\bar{P}_s}{\bar{\dot{m}}_s} [G_{xs}\, e^{-s\tau_{xs}} + G_{fs}\, e^{-s\tau_{fs}}]$$

$$\hat{P}_s = n_s (1-e^{-s\tau_s})$$

$$B_s = \frac{1 + \alpha_s(s)\, \bar{u}_s}{1 - \alpha_s(s)\, \bar{u}_s}$$

V, B, Staged Combustion Model (cont.)

In general, it has been observed that the total time lag is about 6 to 10 times larger than the sensitive time lag. Thus, for frequencies of interest to high frequency instability, the effects of the feed system terms will tend to average out over the finite length of the actual combustion zone. However, since the total time lag includes the times required to accomplish the processes of atomization, vaporization, mixing, and heating of the propellants, some interaction is likely in high pressure engines, particularly in the secondary combustor.

The most successful approach to the solution of the perturbation equations for high frequency instability has been to consider the relations between the system parameters that must hold in the case of neutral oscillations, the "stability limit" relations. The generalized frequency, $s = \lambda + i\omega$, includes both a real part λ, which is the amplification factor, and an imaginary part $i\omega$, where ω is the oscillation frequency. To obtain the stability limit conditions, the real part λ is set equal to zero. The system equations can then be reduced to a single complex characteristic equation, which indicates that the occurrence of instability involves both a gain and a phase condition. It has been found convenient to select two of the combustion parameters, and to solve for these parameters as function of the frequency and of the other system parameters.

TABLE 1

COMPARISON BETWEEN COAXIAL ELEMENTS USED FOR CONTRACTS NAS 8-11741 AND NAS 8-20672

Contract NAS 8-	11741 (past)					20672 (present)
Injector Characteristics:						
Task number	I	II	III	IV	V	--
Number of elements	54	54	108	54	54	54
Oxidizer orifice diameter, in.	0.230	0.256	0.169	0.130	0.071	0.224
Fuel annulus width, in.	0.033	0.034	0.015	0.033	0.034	0.028
Oxidizer injection area, in.	2.22	2.74	2.23	0.716	0.211	2.13
Injection area ratio	0.984	0.748	1.02	3.06	9.74	0.943
Design mixture ratio range	4-6	4-6	4-6	1-2	1-2	4-6
Injection density, lb/sec-in.^{2}	0.2-1.1	0.6-1.1	0.3	0.3-0.6	0.1-0.3	3.0
Chamber configuration	Cylindrical					Annular

TABLE 2

SUMMARY OF FULL-SCALE COAXIAL INJECTOR DESIGN CHARACTERISTICS

Number of elements		54
Thrust per element (F/el)	lb	1200
Mixture ratio (MR)		5.5
Chamber pressure (P_c)	$lb/in.^2$	2500
Injection density ($\dot{w}/A_j$)	$lb/sec\text{-}in.^2$	3.15
Total flow rate ($\dot{w}_T$)	lb/sec	180
Oxidizer flow rate ($\dot{w}_o$)	lb/sec	152
Fuel flow rate ($\dot{w}_f$)	lb/sec	27.6
Injector velocity ratio (v_f/v_o)		3.5
Oxidizer velocity (v_o)	ft/sec	150
Fuel velocity (v_f)	ft/sec	525
Fuel temperature (TFJ)	°R	80
Pressure drop across oxidizer orifice (ΔP_o)	psid	350
Pressure drop across fuel orifice (ΔP_f)	psid	260
Oxidizer orifice diameter (D_o)	in.	0.224
Fuel orifice diameter		
Inside	in.	0.283
Outside	in.	0.339
Annulus width normal to flow	in.	0.035
Orifice included impingement angle (α_i)	°	60

Note: This injector is schematically shown in Figure 5 and a photograph of the injector is included as Figure 6.

TABLE 3

TRIPLET INJECTOR COMPARISON

Parameter	High Inj Density	Low Inj Density
Injection density, lb/sec-in.^{2}	3.0	1.0
Number of elements	600	192
Total flow rate, lb/sec	≈180	≈60
Mixture ratio	5.5	5.5
Orifice exit velocity, ft/sec		
(a) Fuel	700	700
(b) Oxidizer	200	200
Orifice diameter, in.		
(a) Fuel	0.047	0.047
(b) Oxidizer	0.040	0.040
Impingement angle, °	30	30
Impingement height above face, in.	0.348	0.433
Fuel bar height above oxidizer orifice plane, in.	0.197	0.250
Number of radial fuel bars	48	24
Fuel temperature, °R	80	80
Fuel coolant, %	8	8

TABLE 4

FULL-SCALE ENGINE NOZZLE CONFIGURATION

Parameter	Units	Magnitude of Parameter at Chamber Pressure of 1500 psia	2500 psia
Throat diameter (D_t)			
OD	in.	9.290	8.480
ID	in.	7.090	7.090
Exit diameter (D_e)			
OD	in.	11.010	10.200
ID*	in.	5.400	5.400
Throat area (A_t)	$in.^2$	28.3	17.0
Exit area** (A_e)	$in.^2$	95.2	81.8
Area ratio (A_e/A_t)		3.36	4.81
Entrance angle (β) (center body and chamber nozzle inserts)	°	50	50
Expansion angle (α) (center body and chamber nozzle inserts)	°	15	15

*With carbon extension nozzle detached.
**With carbon extension nozzle attached; i.e., if attached, center body nozzle exit diameter = 0.

TABLE 5

EXCITATION CHAMBER TRIPLET ELEMENT INJECTOR CONFIGURATION

Parameter	Units	Magnitude	
Number of elements	--	3	11
Thrust per element (F/el)	lb	370	100
Impingement incidence angle	°	30	30
Mixture ratio		5.5	5.5
Total flow rate ($\dot{w}$)	lb/sec	3	3
Oxidizer flow rate ($\dot{w}_o$)	lb/sec	2.54	2.54
Fuel flow rate ($\dot{w}_f$)	lb/sec	0.46	0.46
Oxidizer orifice diameter (D_o)	in.	0.0755	0.0400
Fuel orifice diameter (D_f)	in.	0.0885	0.0470
Fuel coolant orifice diameter (D_{fc})	in.	0.026	0.026
Percent fuel coolant	%	4.7	4.7
Oxidizer velocity (V_o)	ft/sec	190	190
Fuel velocity (V_f)	ft/sec	665	665
Velocity ratio (V_f/V_o)		3.5	3.5
Fuel temperature (T_f)	°R	80	80

TABLE 6

EXCITATION ENGINE CHAMBER CHARACTERISTICS

Wedge Dash Number	Number of Inserts	Fundamental Frequency, Hz	Included Chamber Angle, °
No wedge	7	2000	36.0
-1	5	2800	25.2
-3	4	3500	19.8
-5	3	4500	14.5
-7	2	7000	9.0

TABLE 7

EXCITATION ENGINE NOZZLE GEOMETRY

Nozzle Dash Number Chamber Pressure		No. of Injector Inserts	Propellant Flow Rate, lb/sec	Nozzle Throat Width*, inches Chamber Pressure	
1500 psia	2500 psia			1500 psia	2500 psia
-17	-9	7	21	1.470	0.885
-19	-11	5	15	1.050	0.630
-21	-13	4	12	0.840	0.505
-11	-15	3	9	0.630	0.380
-15	-23	2	6	0.380	0.230

*The throat height is a constant 2.250 inches.

TABLE 8

STEADY STATE AND STABILITY TEST RESULTS

	OPERATING CONDITION PARAMETERS						STABILITY PARAMETERS								
							High Frequency						Low Frequency		
Test No.	Time, sec	Mixture Ratio	Velocity Ratio	Chamber Pressure, psia	Hydrogen Temperature, °R	Avg. Mach No.	Frequency, Hz	Amplitude, psi (peak-to-peak)	Mode	Cause SP. or P.	Grain Size/ Pulse Ampl.	Stability	Frequency, Hz	Amplitude, psi (peak-to-peak)	REMARKS
001	1.016	6.05	3.44	1575	83.4	0.29	2400	800	IT	*P	20/960	*S	--	--	
	1.210	5.86	3.61	1532	82.9										
	1.604(FS-2)	6.62	3.14	1417	80.6										
002	1.140	5.82	3.39	1425	75.5	0.29	2450	1300	IT	P	20/250	S	--	--	Oxidizer flow measurement erratic at FS-2.
	1.575	5.96	3.27	1467	76.5										
	1.944(FS-2)	SEE REMARKS		1378	76.6										
003	0.970	3.94	16.50	413	98.3		N O R E C O R D S					U	100	100	Ox. valve malfunctioned.
	1.140	3.70	16.06	454	99.0							S	--	--	
	1.495	4.06	13.01	452	90.1						20				
	1.577	3.15	16.14	462	94.1						40				
	1.693	3.97	17.44	445	104.5						80				
	2.001(FS-2)	3.20	14.39	454	85.5										
004	0.996	5.92	3.47	2345	96.9	0.176	2500	1000	IT		20/1000	S			
	1.475	4.57	4.10	2395	80.1										
	1.596(FS-2)	5.78	3.18	2494	79.4										
005	SEE REMARKS	4.88	26.37	456	172.0		N O R E C O R D S					S	--	--	Ox. valve malfunctioned. Average data used.
006	0.900	3.39	6.13	2285	102.5	0.176	2700	2000	IT	P	20/225	S	--	--	
	1.186	3.72	4.84	2302	78.5										
	1.245(FS-2)	3.76	4.76	2221	77.8										
007	0.900	6.53	6.73	1221	143.5										
	1.086	6.93	6.75	1419	167.8	0.177	S E E R E M A R K S			P	20/100	U	500	750	High frequency pressure instruments sustained damage; however, the data (wave forms) recorded were similar to the previous unstable tests.
	1.462(FS-2)	7.15	7.01	1317	175.4							U	500	750	

*P = pulsed, S = stable, Q = unstable

TABLE 9

EXCITATION ENGINE PERFORMANCE DATA SUMMARY
11-ELEMENT TRIPLET INJECTOR

Parameter	Unit	Test Number 1100-D02-0M-0XX 01	02	03	04	05	06
Date tested	X/X/196X	12/20/7	12/21/7	1/10/8	1/11/8	1/11/8	1/11/8
Duration (t_t)	sec	0.509	1.050	--	--	0.595	0.675
Throat area (A_t) (3)	$in.^2$	1.42	1.42	1.908	1.908	1.908	1.908
Chamber pressure (P_c)	psia	--	950	--	--	1390	1370
Flow rate ($\dot{w}$)							
a. Total	lb/sec	--	9.80	--	--	11.49	12.40
b. Oxidizer	lb/sec	--	9.20	--	--	9.01	9.71
c. Fuel	lb/sec	--	0.60	--	--	2.48	2.68
Mixture ratio (MR)		--	15.30	--	--	3.64	3.62
Velocity ratio (VR)		--	4.60	--	--	8.66	13.3
Injection temperature (T_j)							
a. Oxidizer	°R	--	200	--	--	213	213
b. Fuel	°R	--	200	--	--	151	231
Characteristic velocity (c*)	ft/sec	--	4800	--	--	7614	6790
% Theo c*	%	--	80	--	--	92.1	84.4
No. of injector inserts		3	3	4	4	4	4
Chamber angle	°	14.5	14.5	19.8	19.8	19.8	19.8
Sample time	sec	--	0.5-1.2	--	--	0.55-0.60	0.55-0.60
Test remarks		(1)	(1)	(2)	(2)	(4)	(4)

Notes:
(1) Tests were unsatisfactory due to extreme flow oscillations.
(2) Hydrogen valve failed to open.
(3) Prefire measured value.
(4) Satisfactory test.

TABLE 10

TRANSVERSE EXCITATION CHAMBER HIGH FREQUENCY DATA

Test No.	Time, sec	Mixture Ratio	Velocity Ratio	Chamber Pressure, psia	Hydrogen Temperature, °R	Frequency, Hz	Amplitude, psi (Peak-to-Peak)	Mode	Cause	Growth Rate, db/sec	Remarks
002	Steady-State Averages	12.50	4.60	959	200	--	--	--	--	--	
005	0.358	--	--	--	--	--	--	--	--	--	Thermal ignition of 40-grain pulse.
	0.400	--	--	1250	--	3450	120	Δ IT	* SP	650	
	0.520	3.77	10.33	1361	200	3360	140	IT	SP	650	
	0.560	3.70	8.97	1374	160	3350	170	IT	SP	650	
	0.595(FS-2)	3.57	8.35	1378	140	3300	170	IT	SP	650	
	0.640	3.89	6.84	1380	120	3300	170	IT	SP	650	
006	0.304	--	--	--	--	--	--	--	--	--	
	0.490	3.70	15.88	1347	316						
	0.510	3.76	15.04	1353	295	3300	210	IT	SP	600	
	0.570	3.59	13.53	1353	225	3260	300	IT	SP	600	
	0.640	3.61	10.35	1382	178	3150	256	IT	SP	600	
	0.652	3.57	10.14	1387	167						40-grain charge knocks out instability temporarily.
	0.669	3.51	9.78	1395	162						
	0.675(FS-2)	3.51	9.78	1395	160						
	0.730	3.85	7.92	1387	140	3025	190	IT	SP	330	
	0.900	4.43	6.51	1378	128	2900	190	IT	SP	330	

* SP - Spontaneous instability
Δ IT - First tangential mode

TABLE 11

BESSEL FUNCTION VALUE $(S_{\nu\eta})_{ann}$ FOR TANGENTIAL MODES IN ANNULAR CHAMBERS

Annular Chamber Geometry (Radius) Inner / (Radius) Outer		Tangential Modes 1T	2T	3T	4T	5T	6T
0.910	$(S_{\nu\eta})_{ann}$ =	1.04802	2.09602	3.14401	4.19197	5.23989	6.28778
0.833		1.092	2.1846	3.27672	4.368	5.4588	6.5496
0.667		1.209	2.412	3.61	4.80	5.98	7.14
0.500		1.35	2.68	3.98	5.18	6.34	7.45
0.400		1.41	2.85	4.10	5.27	6.40	7.5
0.333		1.54	2.91	4.17	5.31	6.42	7.5
0.286		1.60	2.99	4.18	5.31	6.42	7.5
0.250		1.64	3.00	4.18	5.31	6.42	7.5
0.222		1.67	3.02	4.18	5.31	6.42	7.5
0.200		1.70	3.025	4.18	5.31	6.42	7.5

NOTE: 1. Figure gives the frequency ratio viz. $\frac{(S_{\nu\eta})_{annular}}{(S_{\nu\eta})_{cylindrical}}$ for different chamber geometries.

2. Calculation of annular chamber tangential frequencies $\left[f = \frac{a(S_{\nu\eta})_{annular}}{2\pi\sqrt{o}} \right]$

Reference: Bridge and Angrist, "Math. of Computation, 16, 78," April 1962.

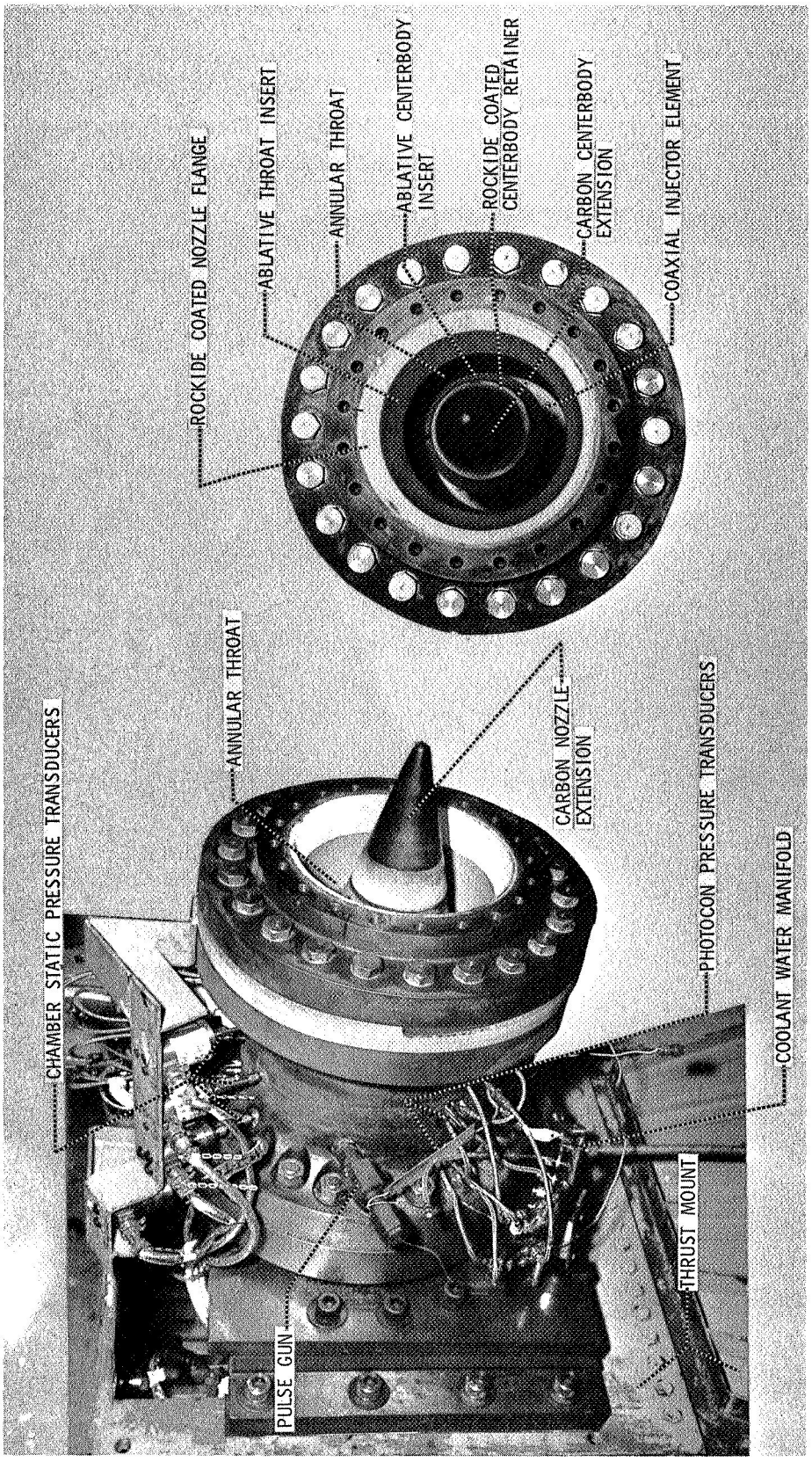

Annular Thrust Chamber Assembly on Test Stand C-6

Figure 1

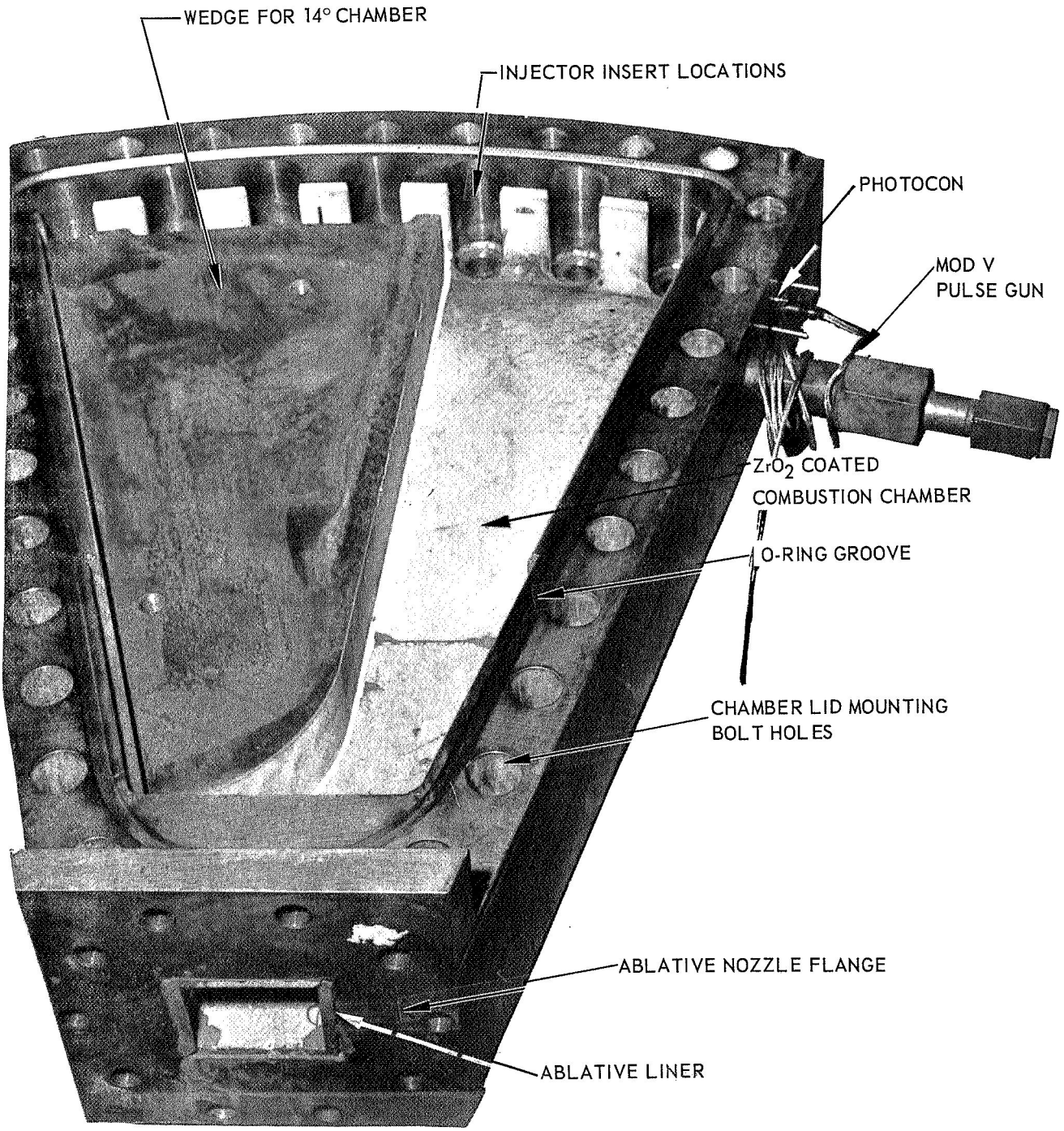

Transverse Excitation Chamber with Lid Removed

Figure 2

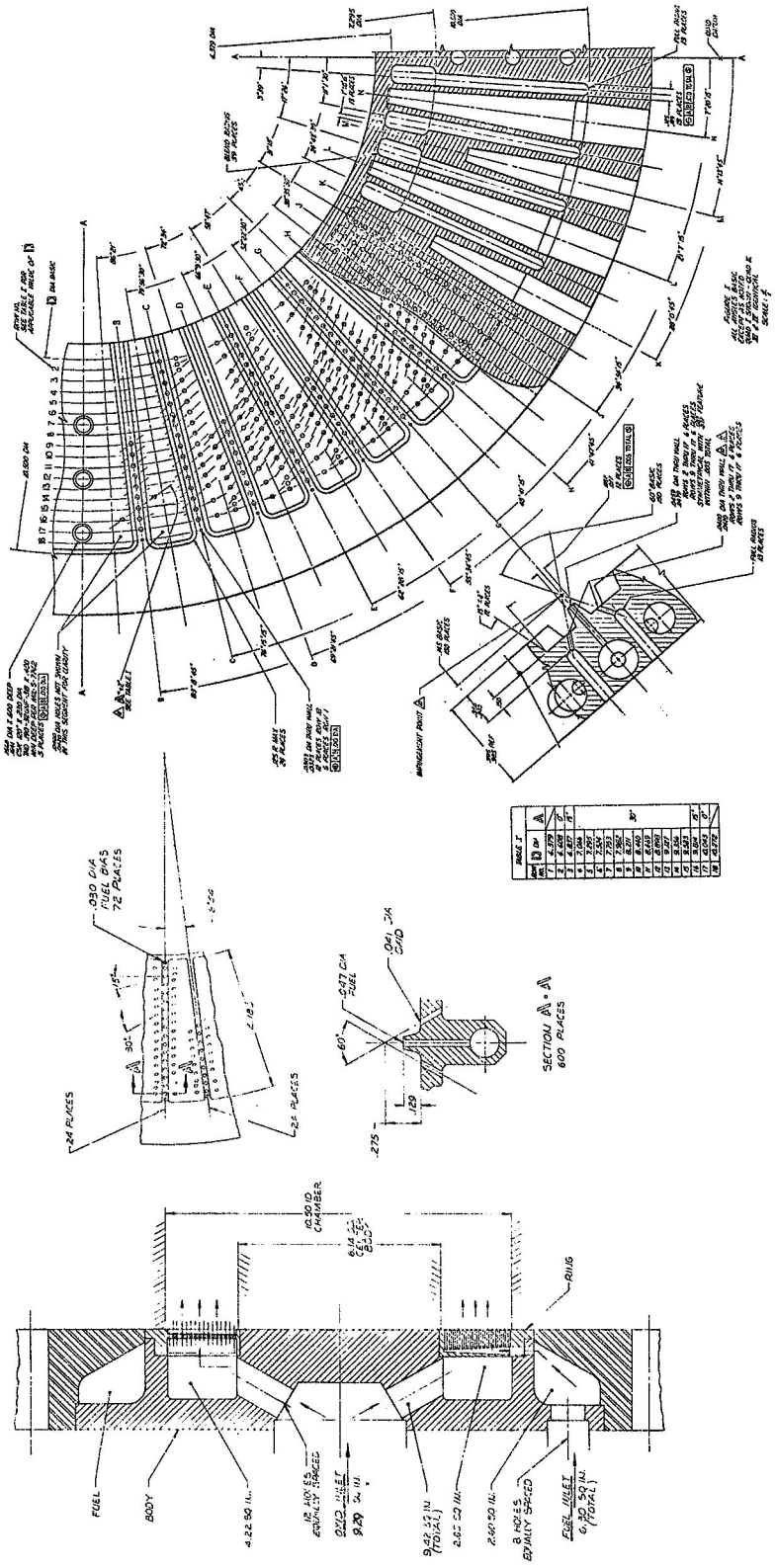

Figure 3

High Injection Density Annular Triplet Injector Schematic

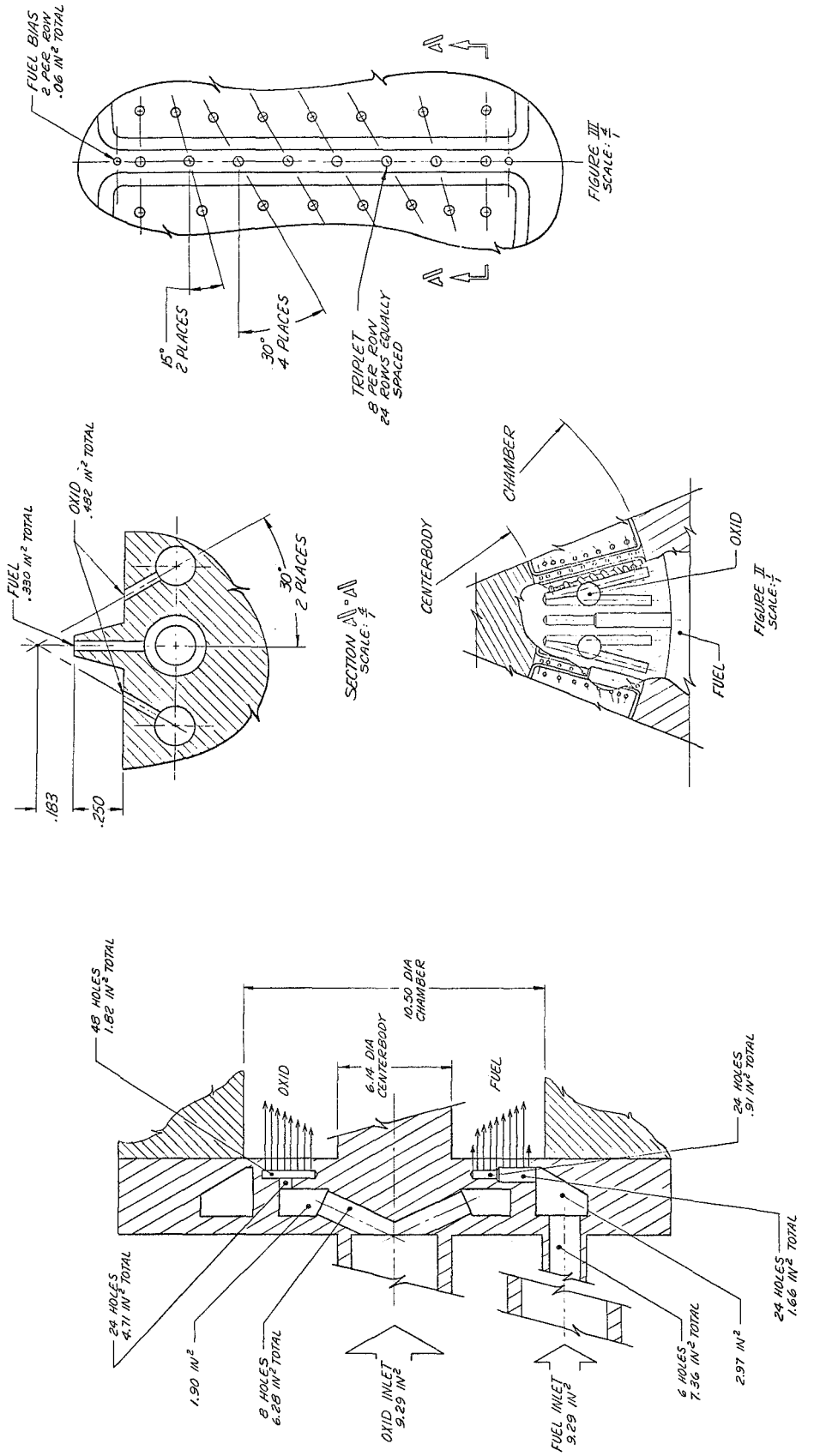

Low Injection Density Triplet Injector Schematic

Figure 4

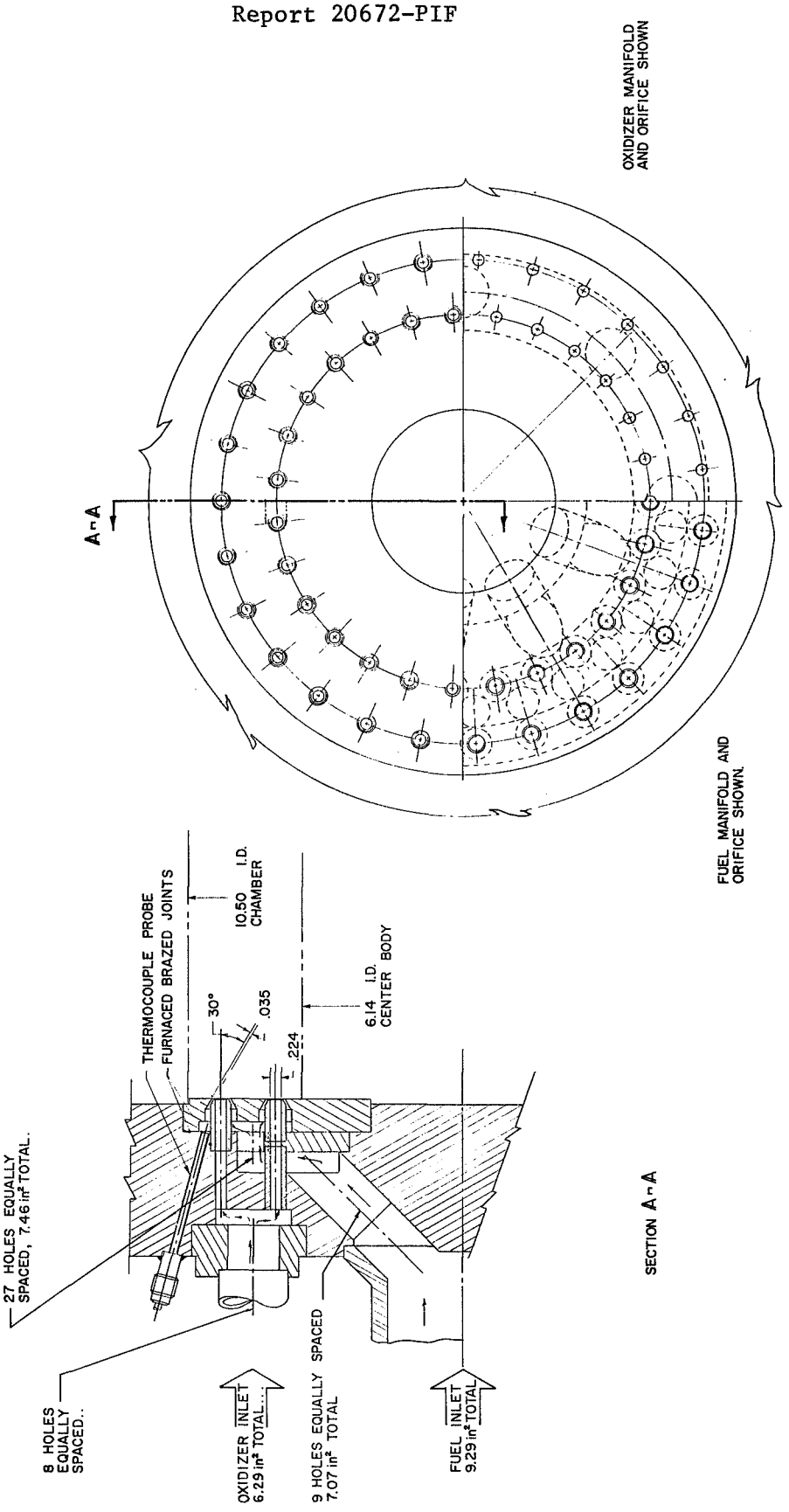

Figure 5

Annular Coaxial Injector Schematic

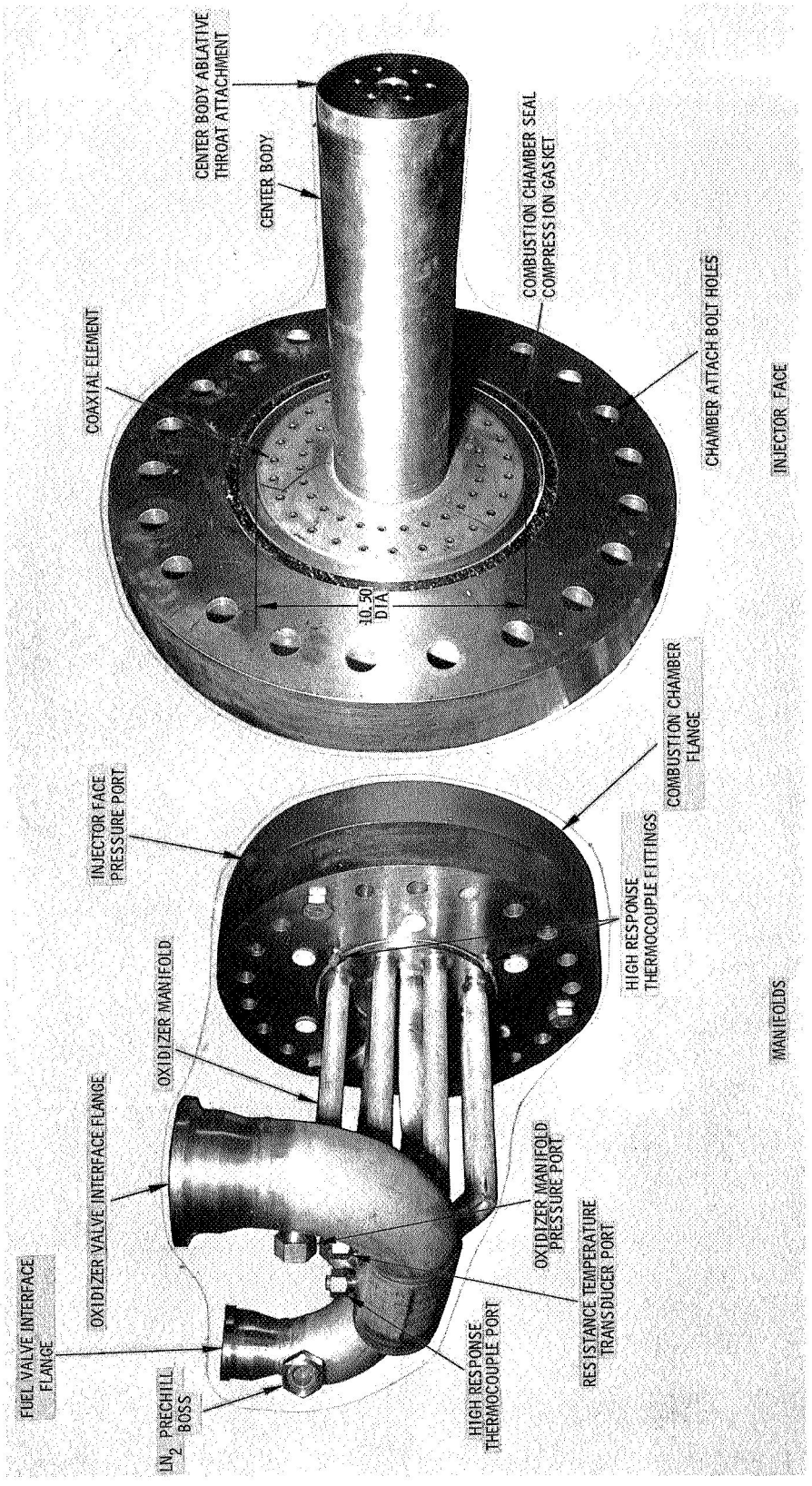

Annular Coaxial Injector

Figure 6

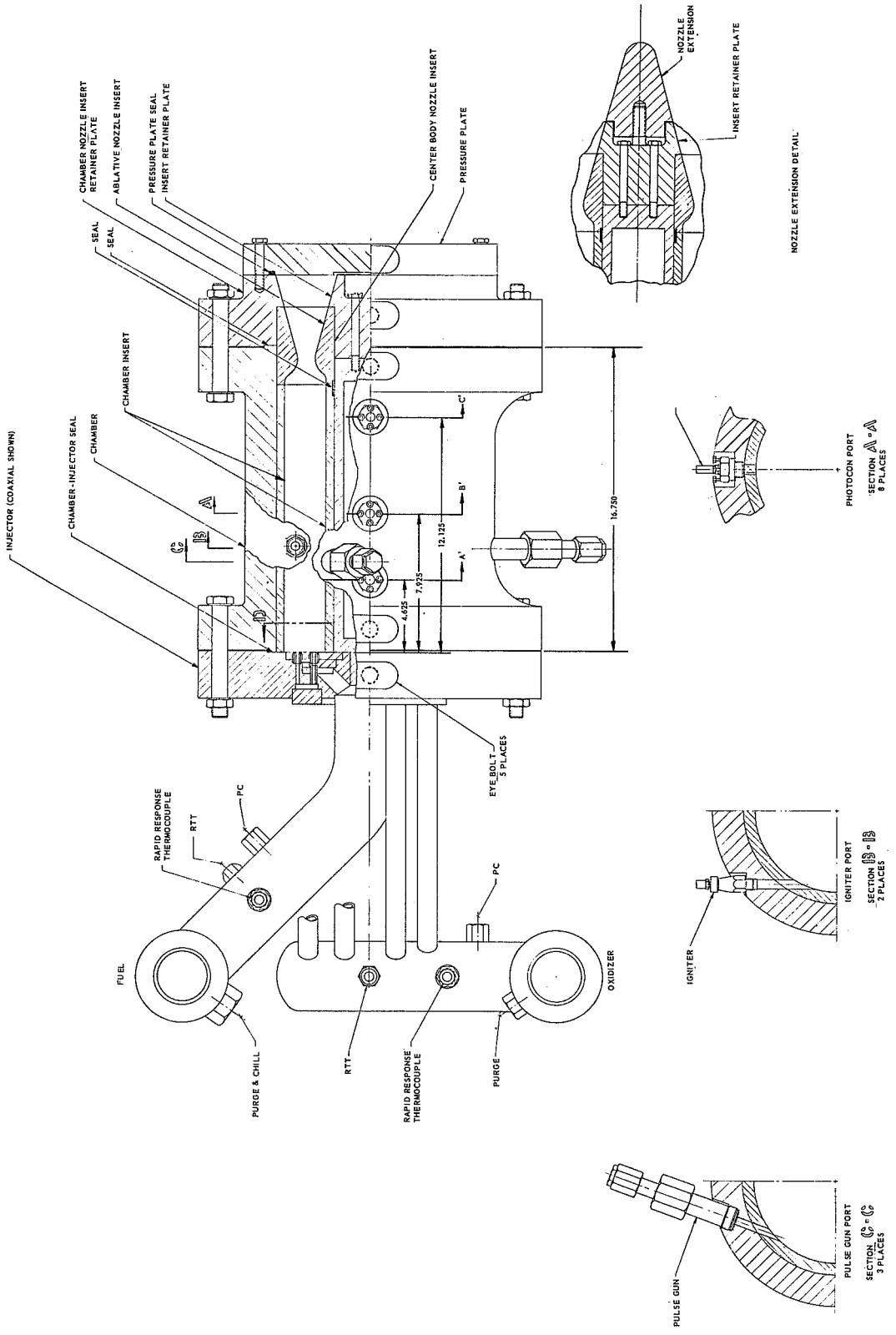

Figure 7

Annular Thrust Chamber Assembly

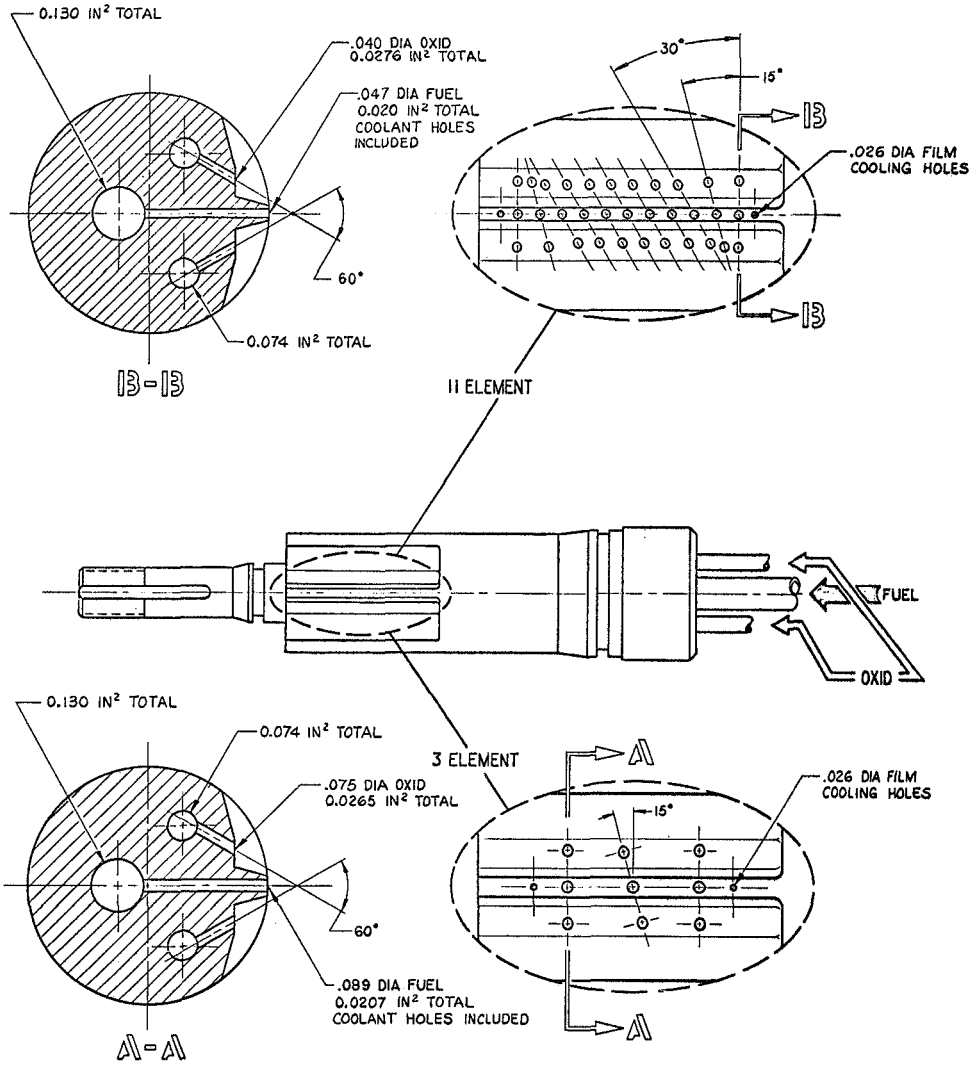

Excitation Chamber Triplet Injector Insert Schematic

Figure 8

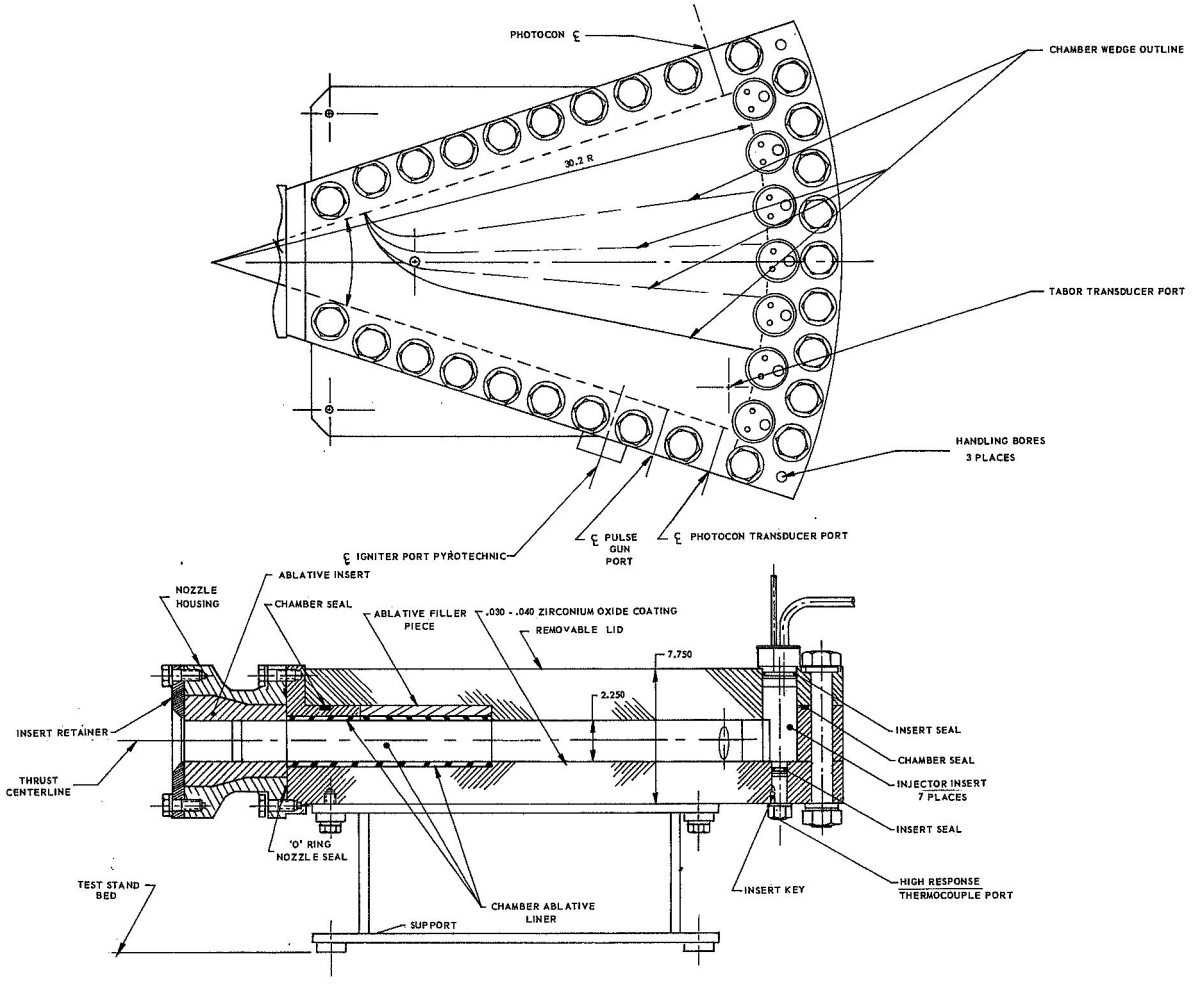

Transverse Excitation Chamber Assembly Schematic

Figure 9

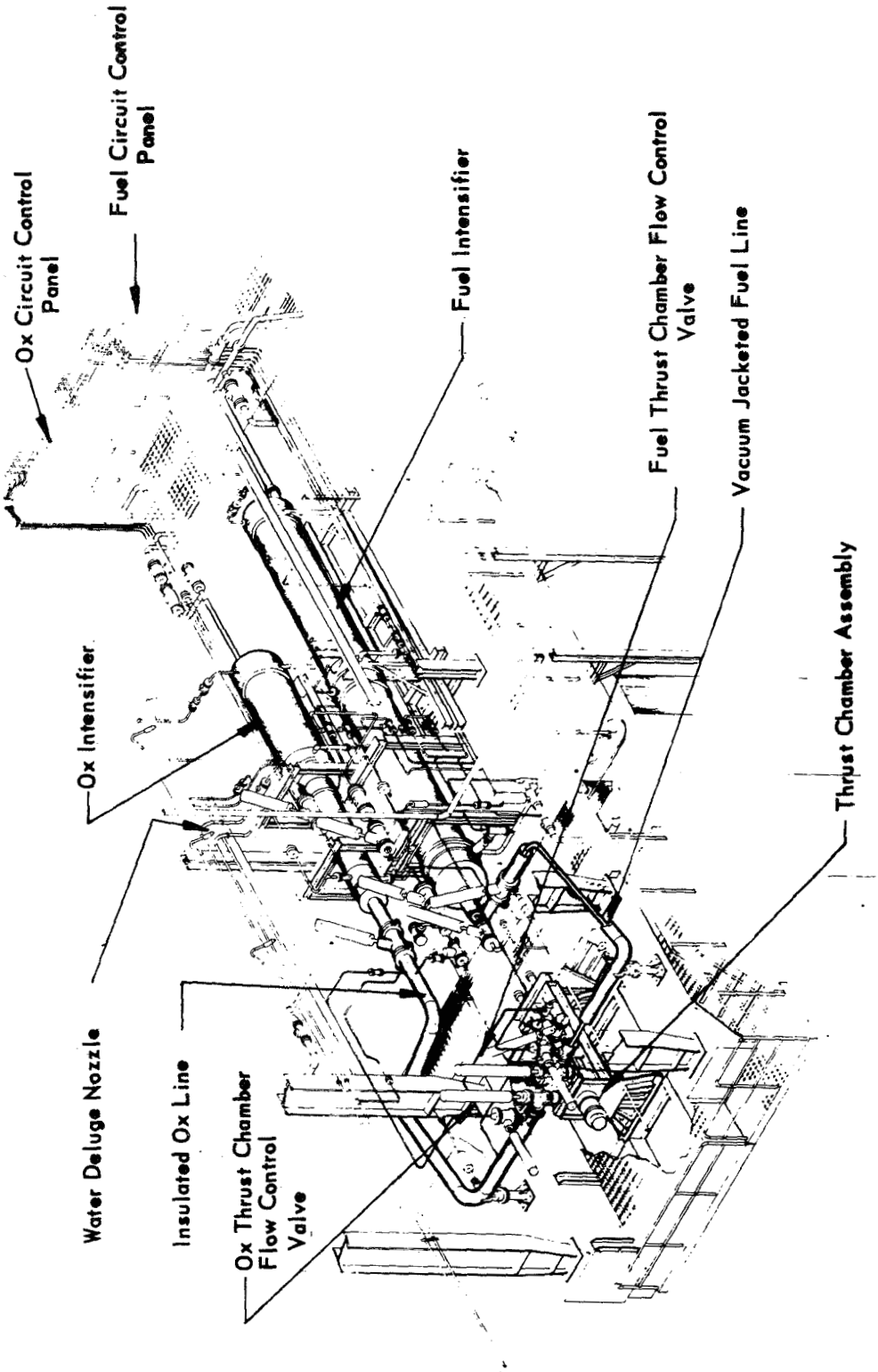

Isometric Drawing of Test Stand C-6

Figure 10

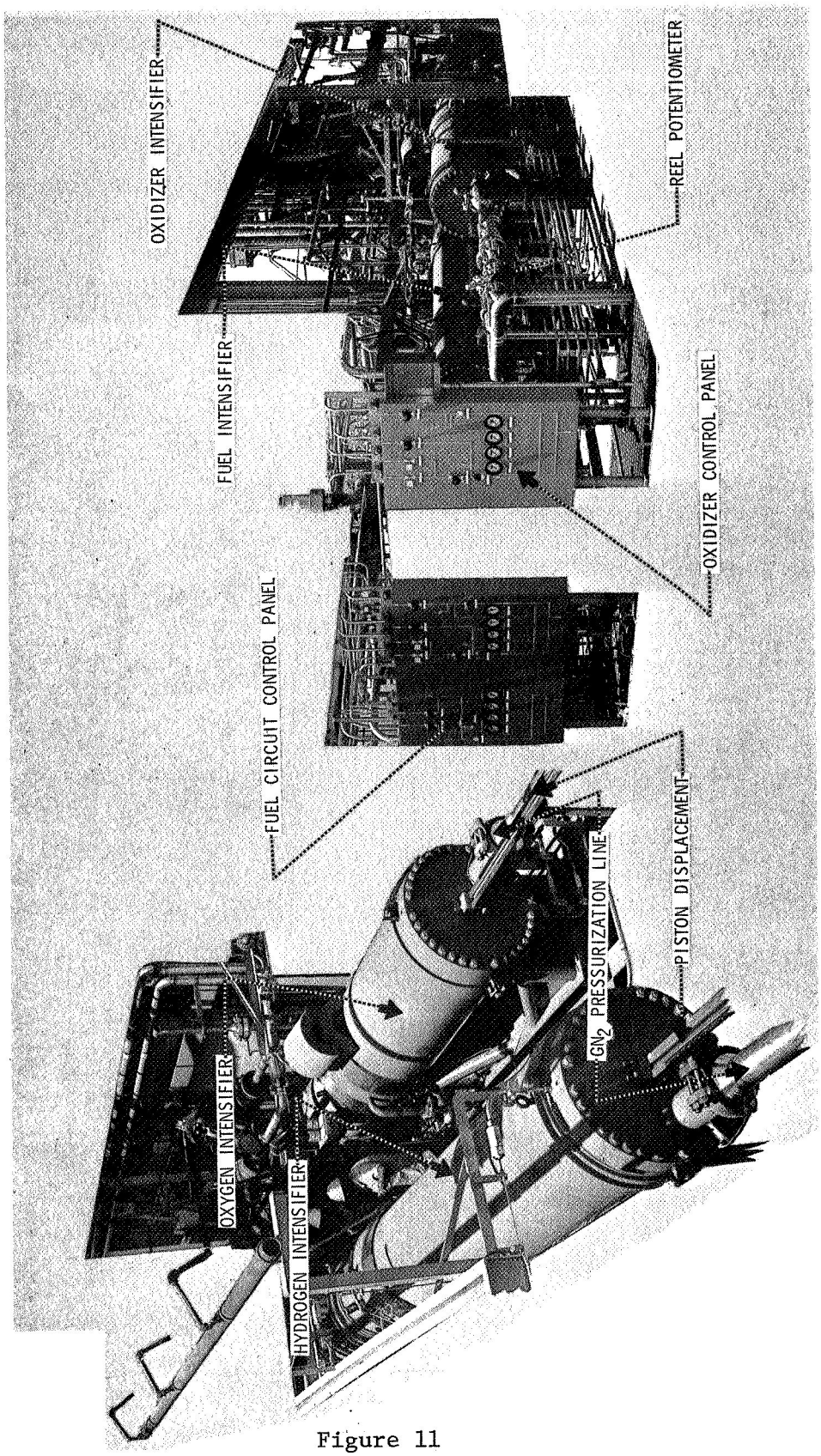

Figure 11

View of C-6 Test Stand and Intensifiers

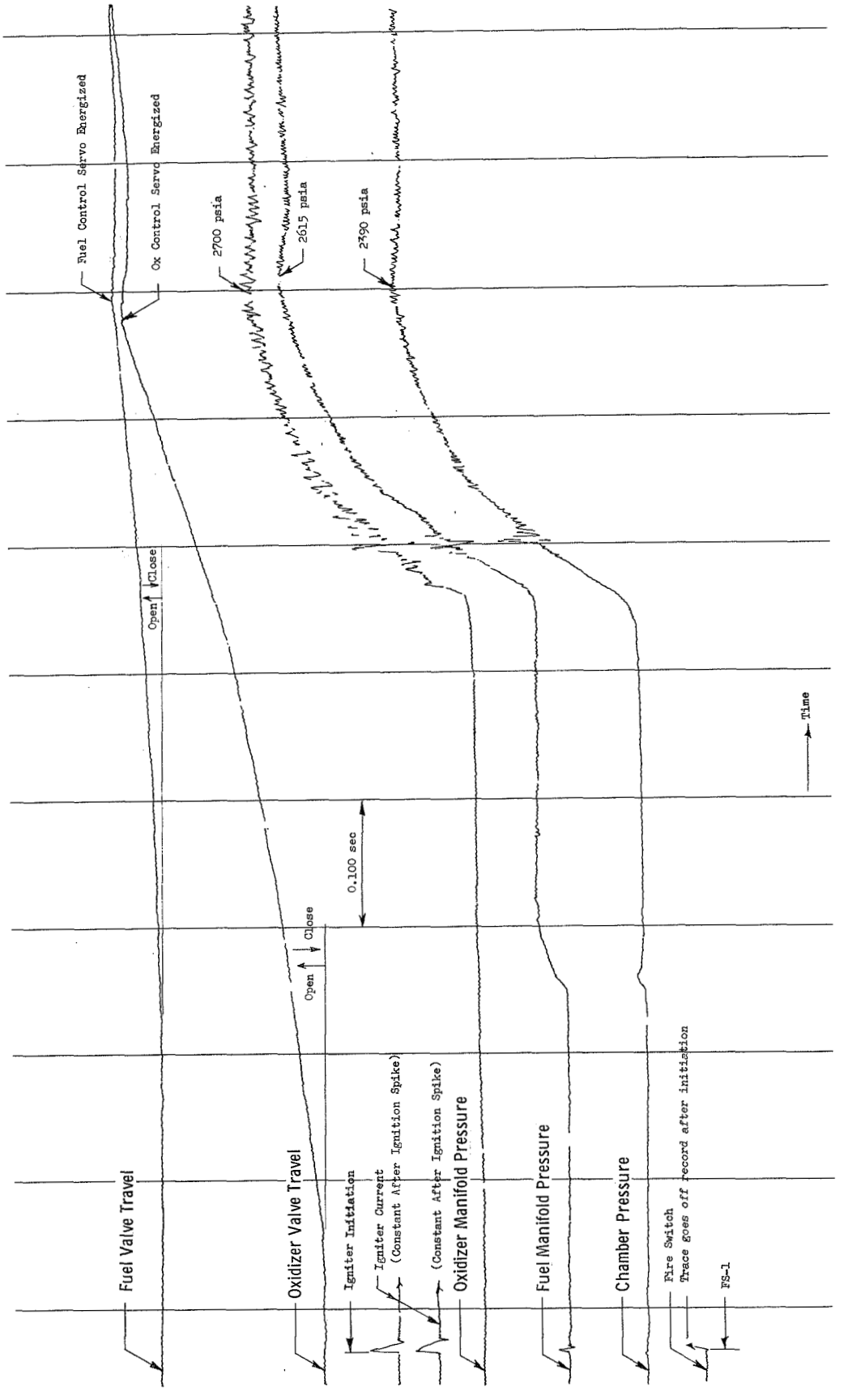

Figure 12

Typical Start Transient Record of an Annular Coaxial Test on Test Stand C-6

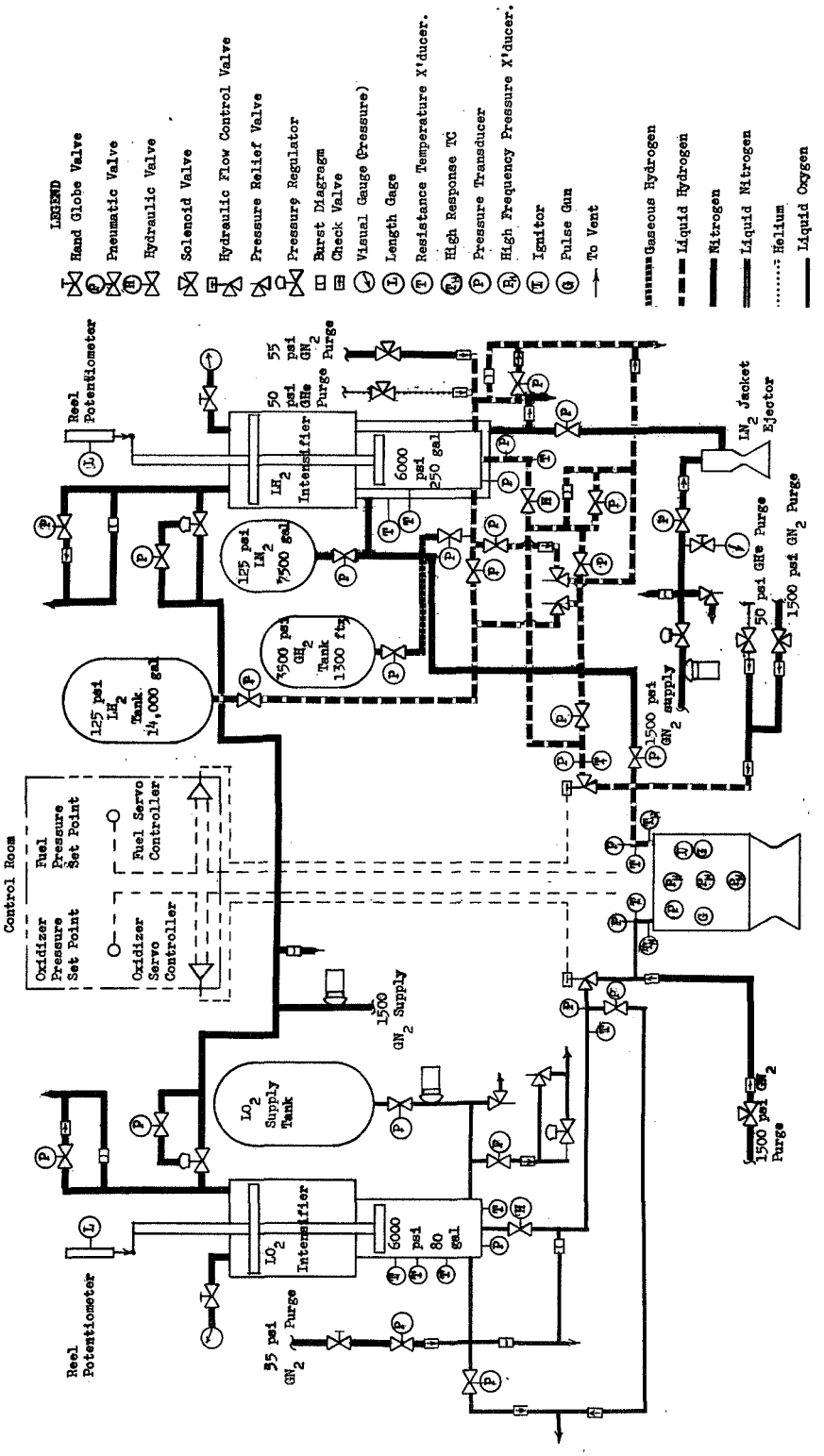

Figure 13

Flow Schematic for Test Stand C-6

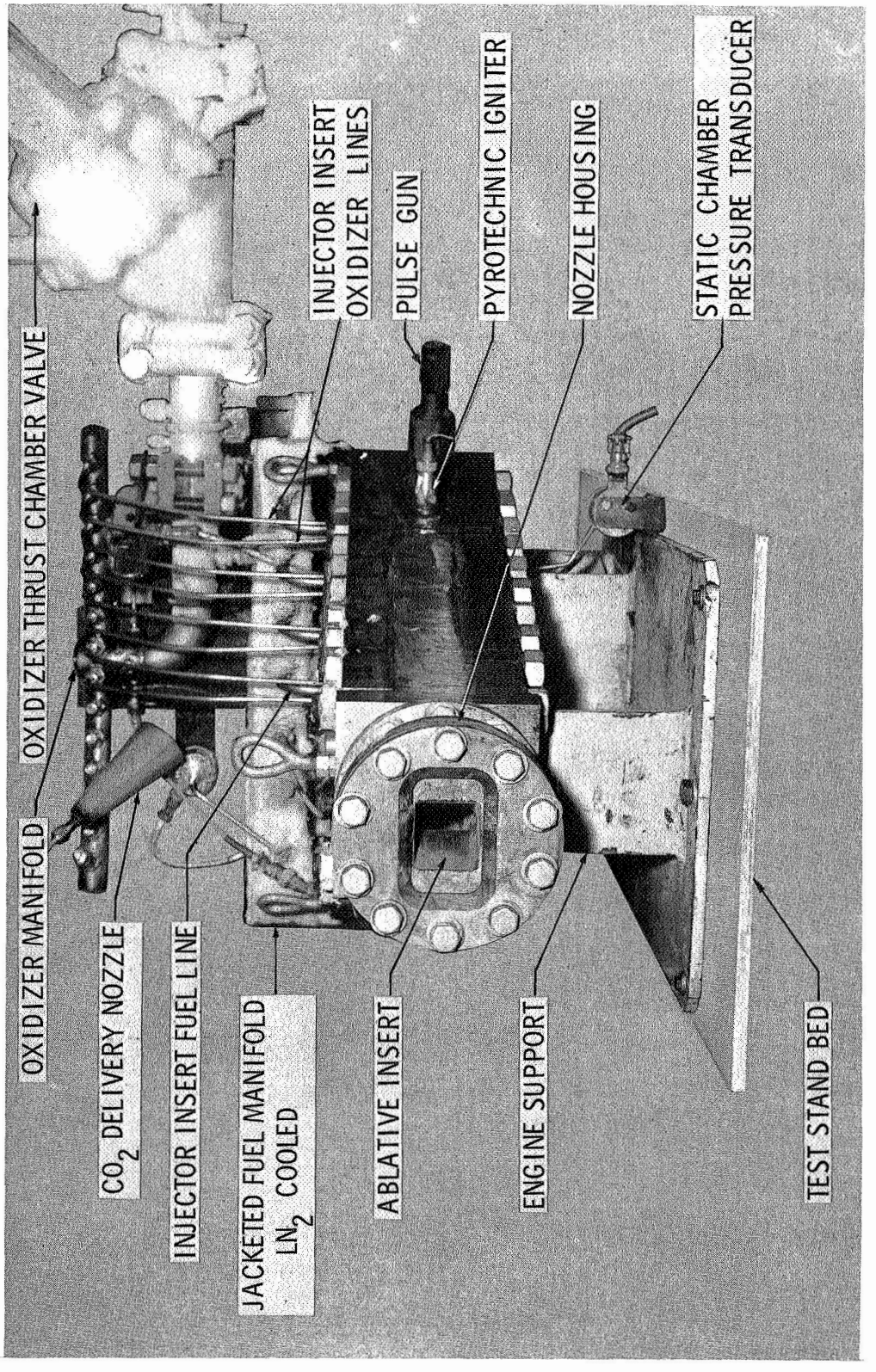

Transverse Excitation Chamber on Test Stand J-1

Figure 14

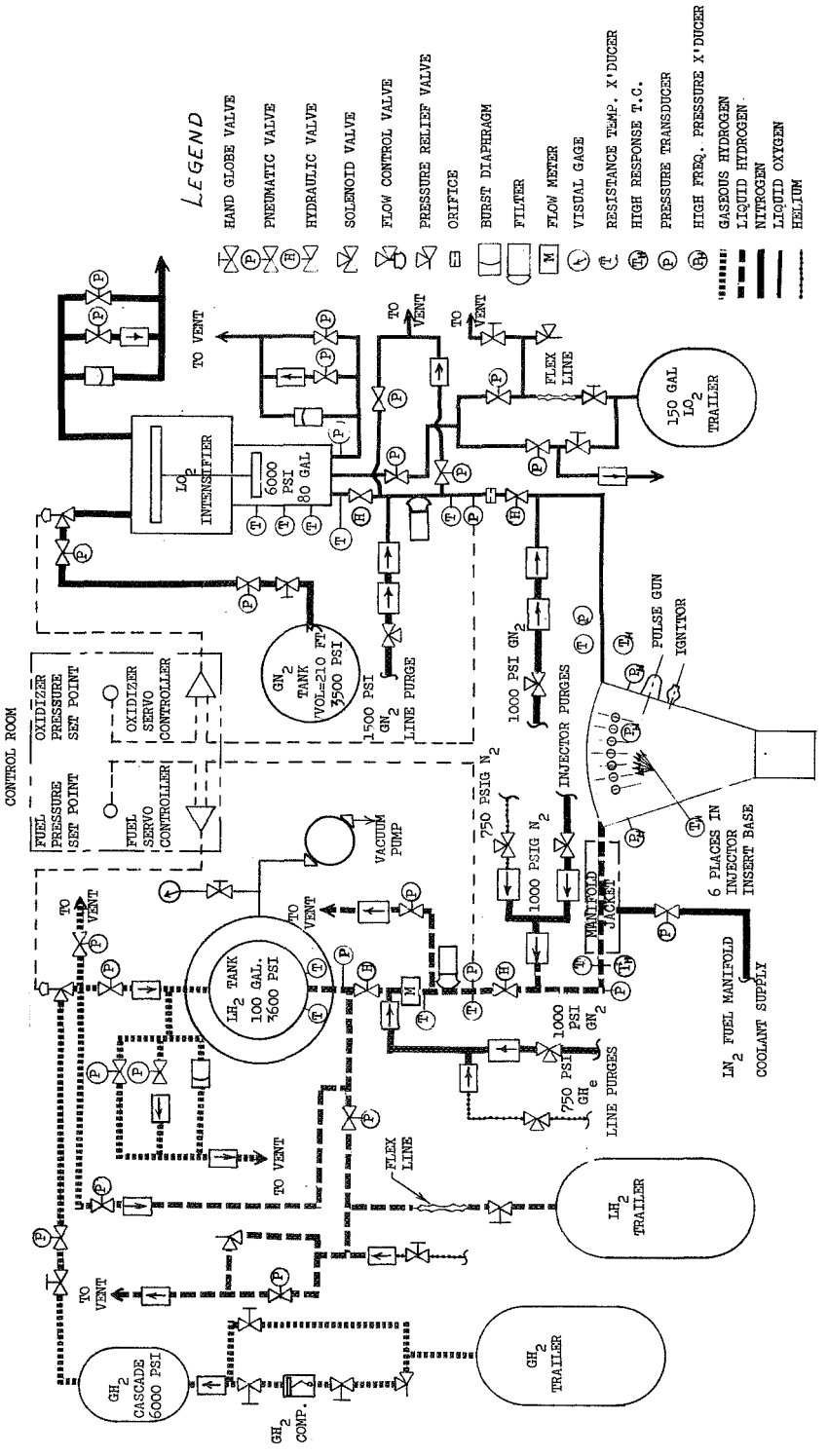

Figure 15

Flow Schematic for Test Stand J-1

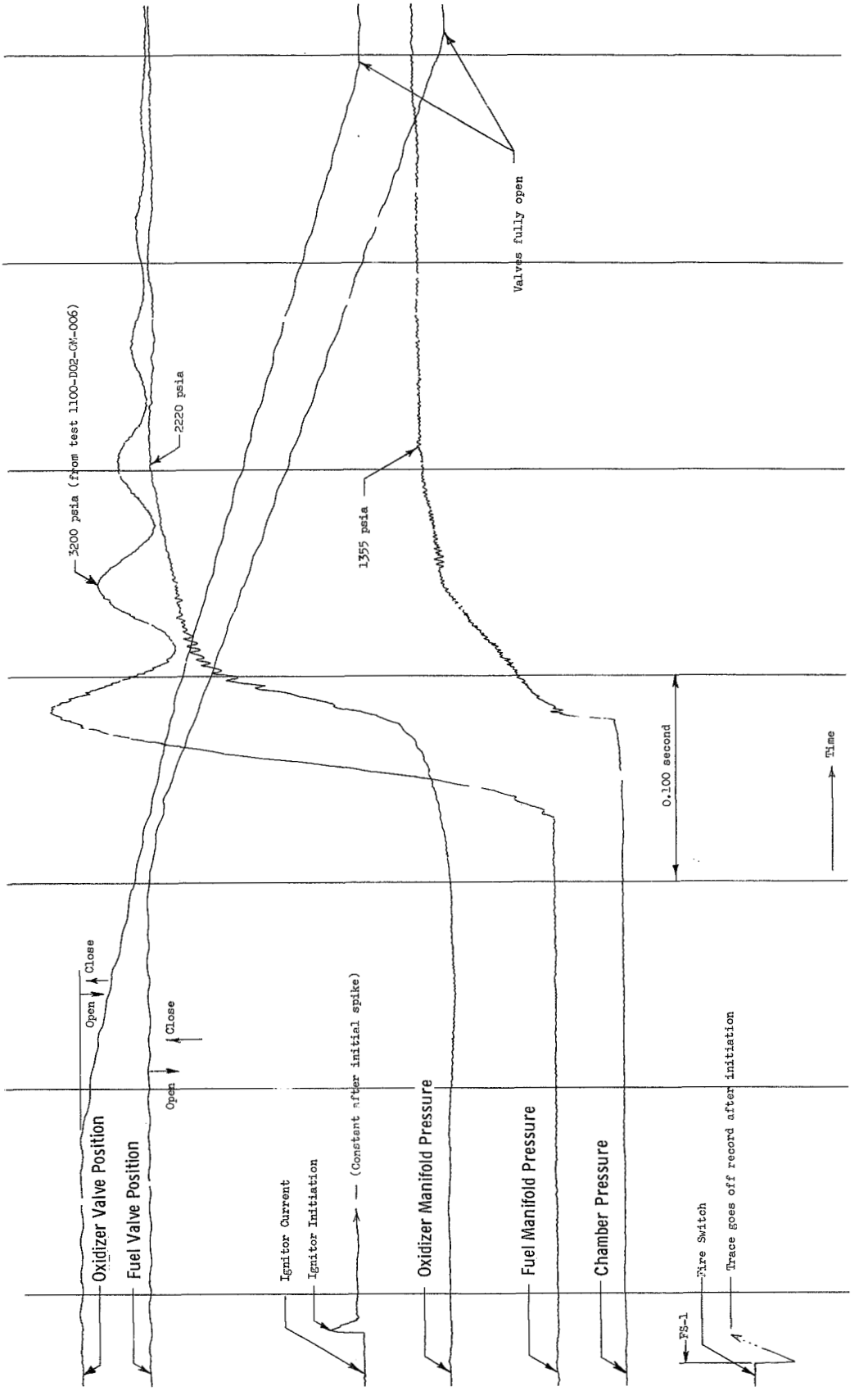

Figure 16

Typical Start Transient for a Transverse Excitation
Chamber Test on Test Stand J-1

LEGEND:

×___STABILITY RETURNS AFTER PULSE DAMPS

O___PULSED INSTABILITY

+___INSTABILITY RETURNS AFTER PULSE DAMPS

□___PULSE SHIFTS MODE

◇___PULSED INSTABILITY ANNULAR CHAMBER

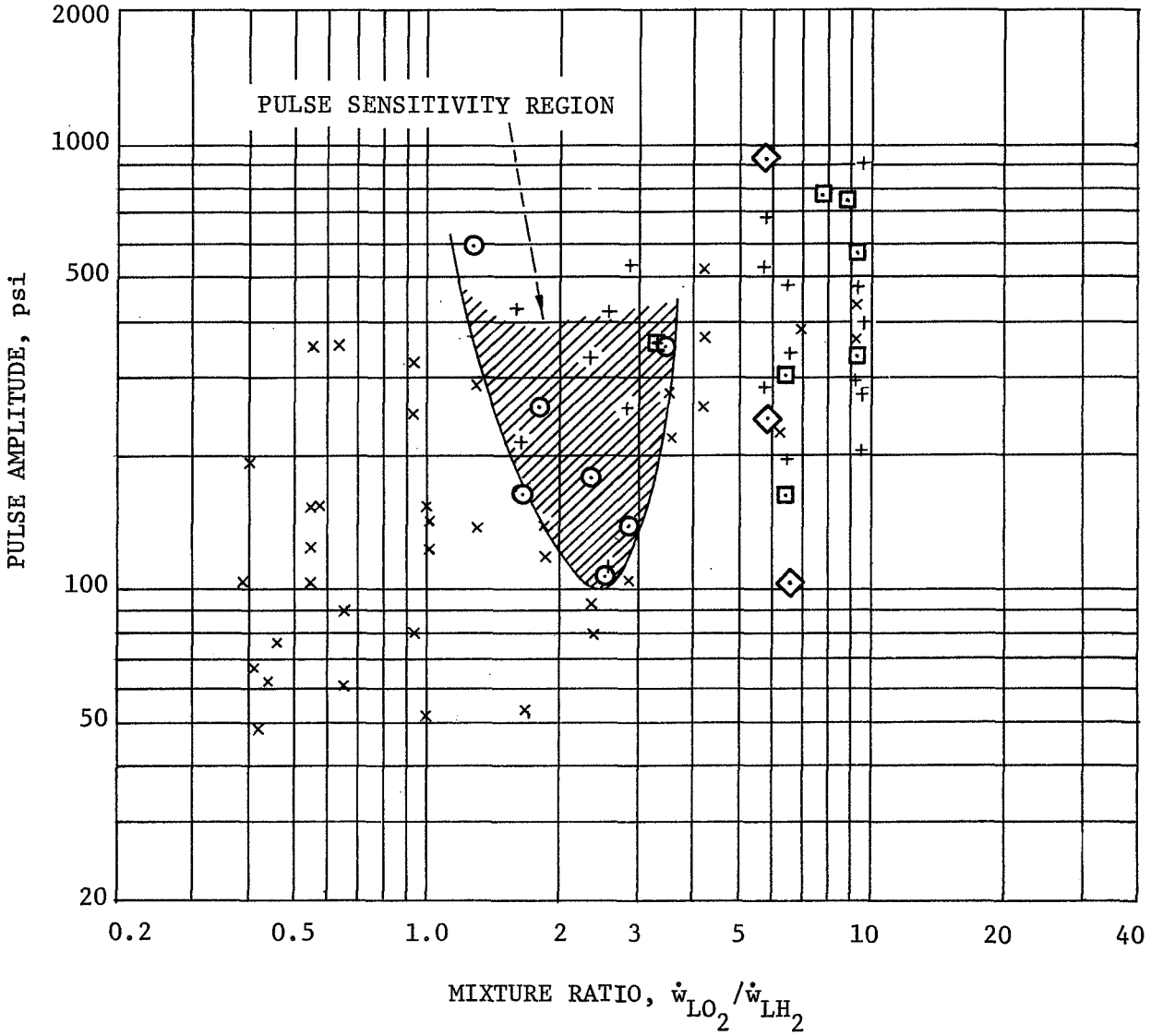

Initial Pulse Amplitude Pc = 1000 psia

Figure 17

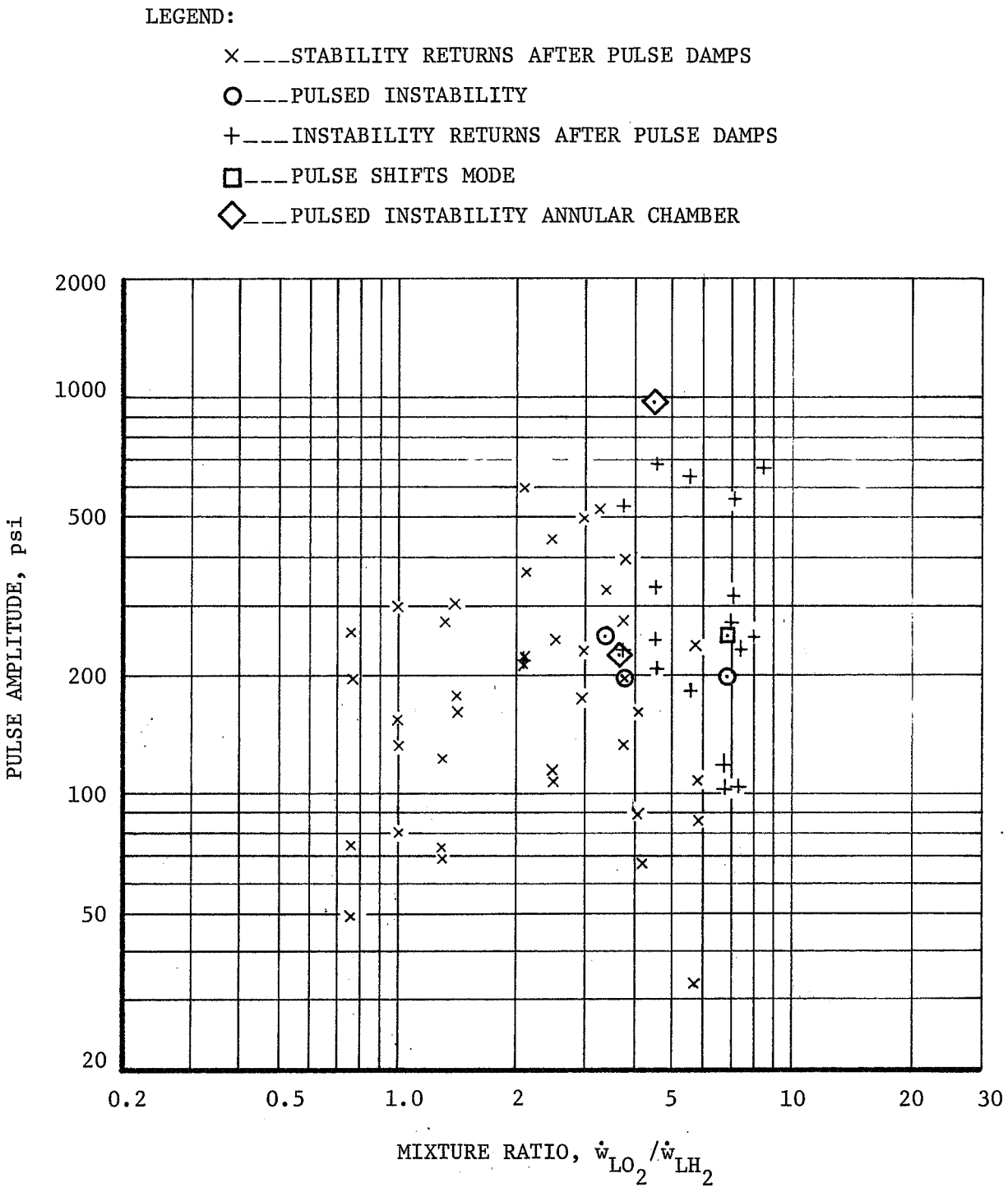

Initial Pulse Amplitude Ps = 2500 psia

Figure 18

WHERE:

▽ _ _ _ PULSED INSTABILITY ANNULAR CHAMBER

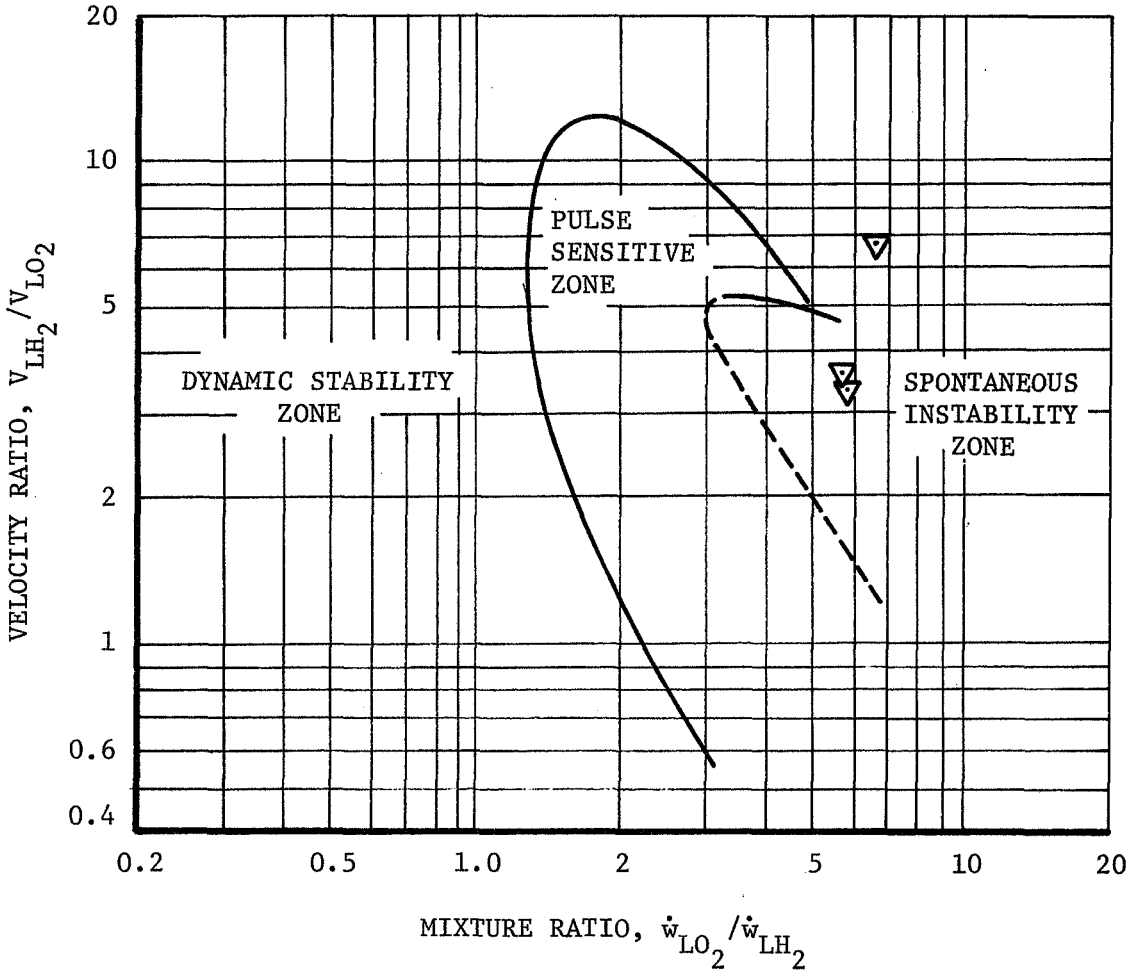

NOTE: CURVES TAKEN FROM AGC HiPc CYLINDRICAL CHAMBER TESTING.

High Frequency Stability Results - All Injectors at 900 Pc 1200 psia

Figure 19

WHERE:

▽ ___ PULSED INSTABILITY ANNULAR CHAMBER

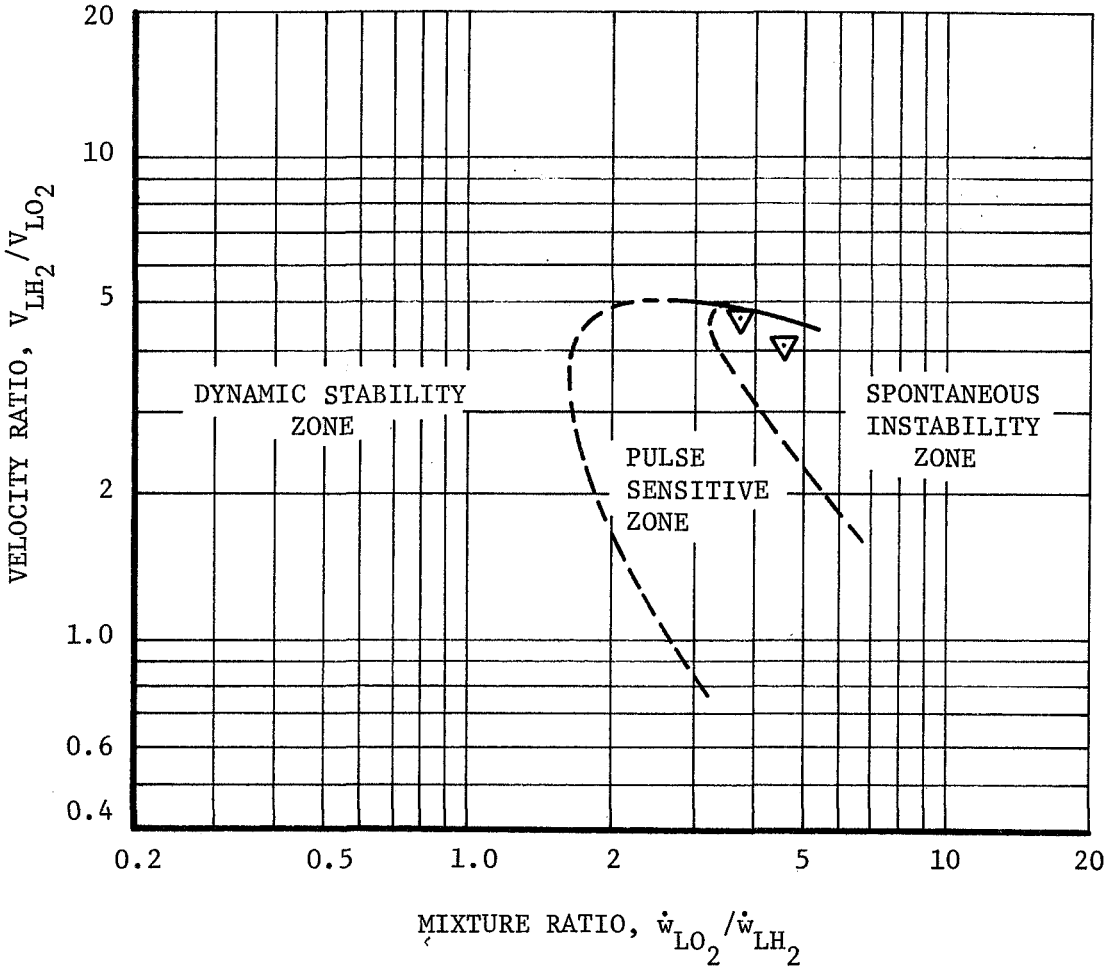

NOTE: CURVES TAKEN FROM AGC HiPc CYLINDRICAL CHAMBER TESTING.

High Frequency Stability Results - All Injectors at 2400 Pc 2700 psia

Figure 20

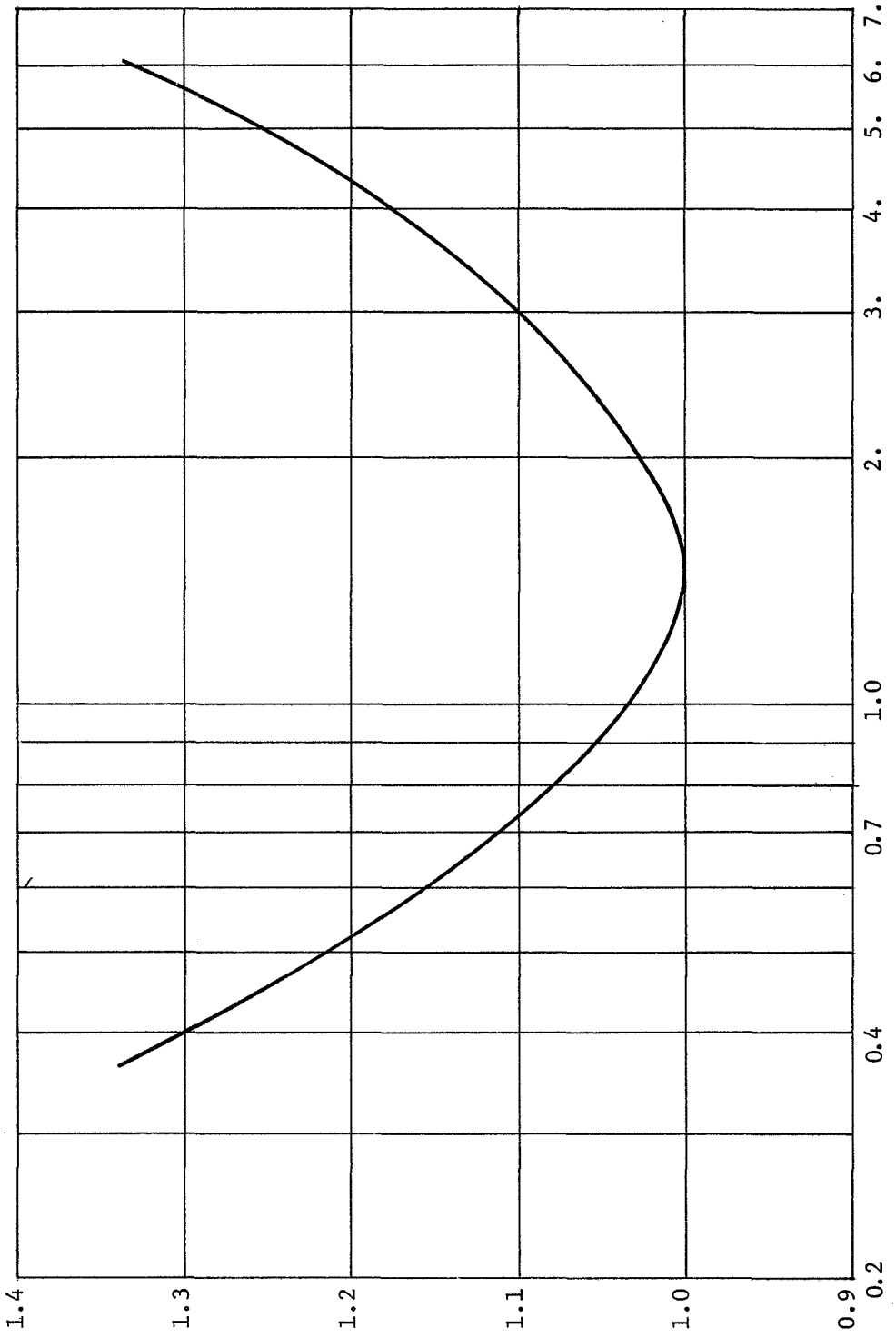

Impingement - Velocity Ratio Function Versus VRSinϕ
for Impinging Coaxial Element

Figure 21

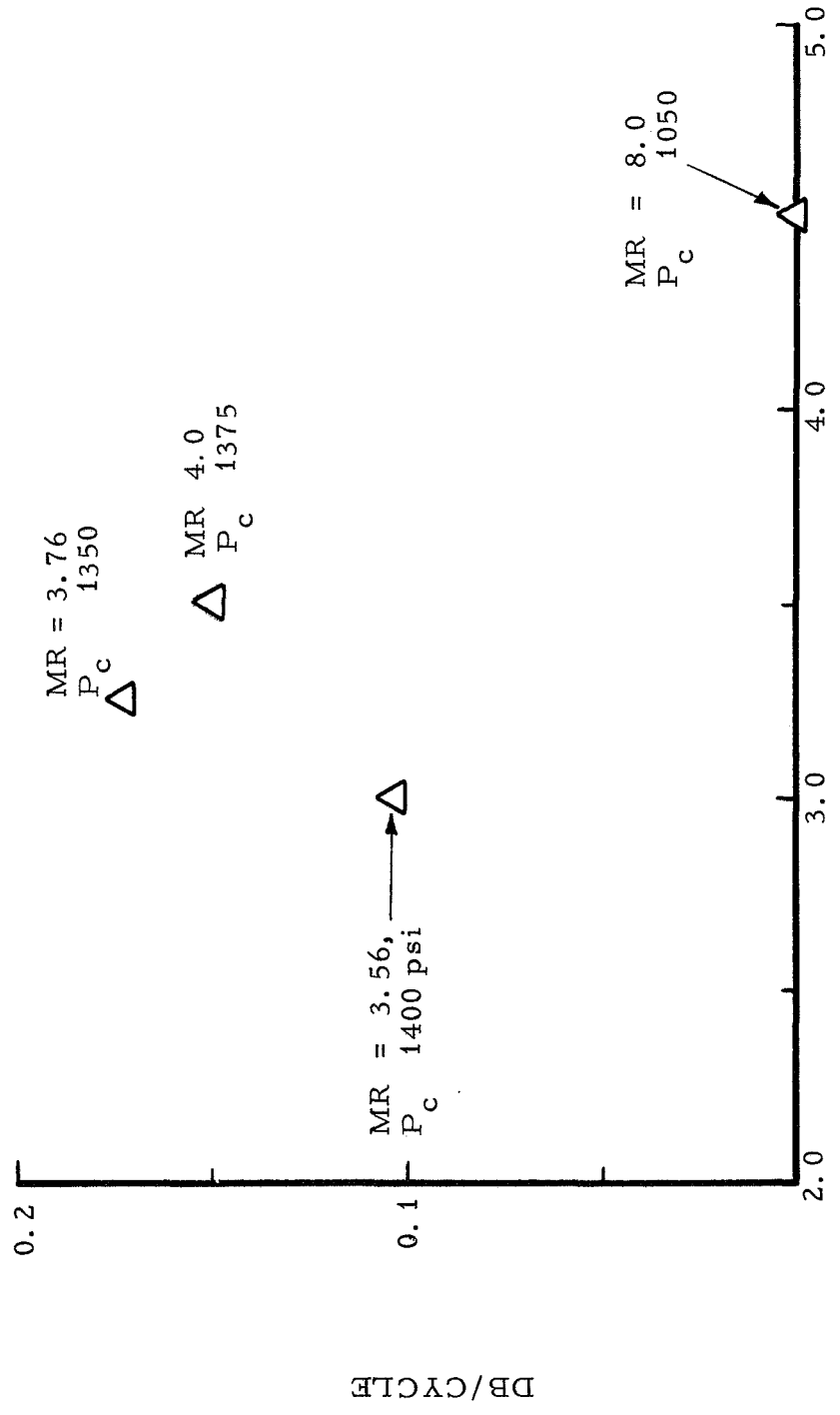

Frequency Response Characteristics of Triplet Injectors

Figure 22

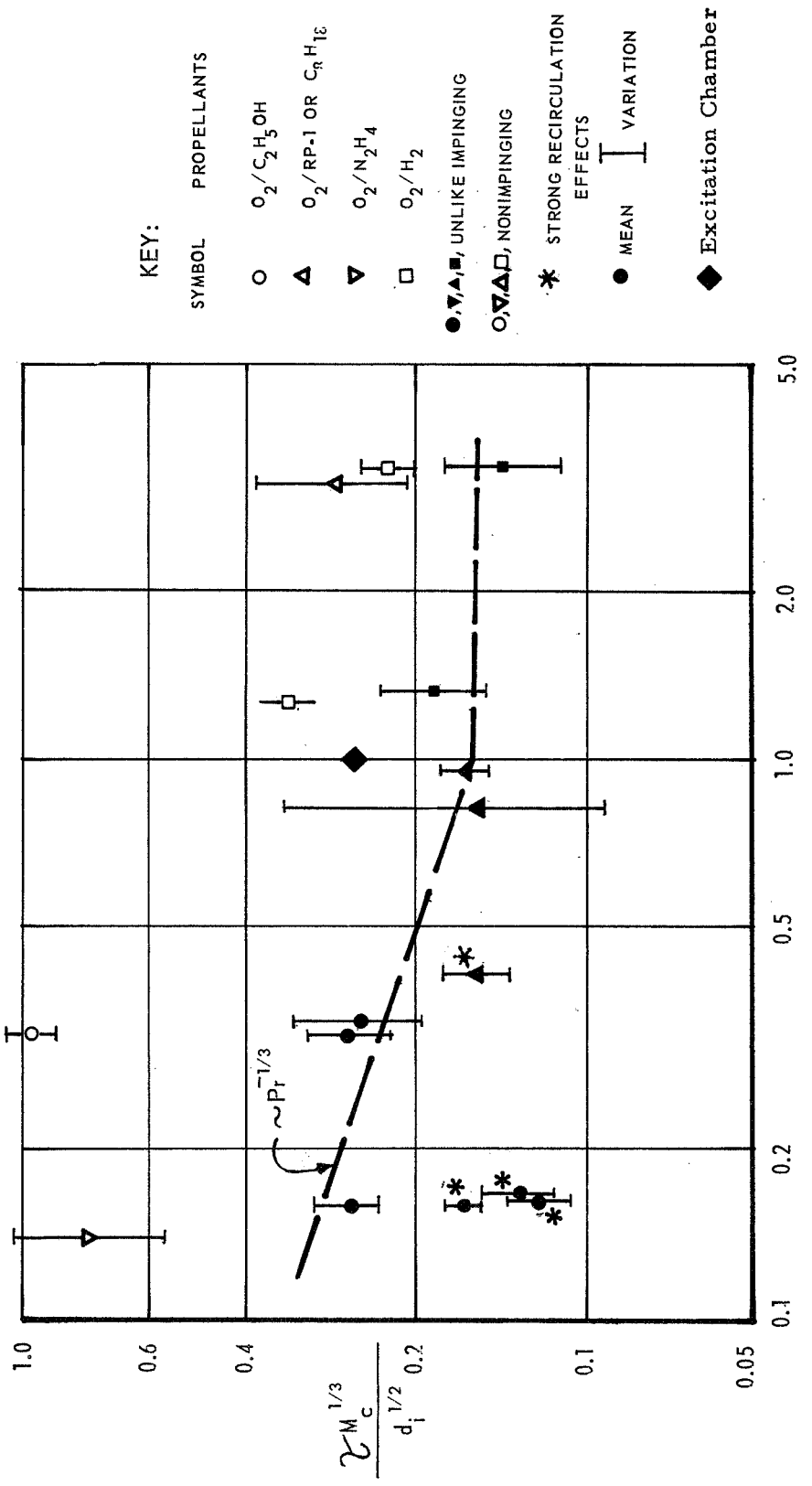

Effect of Pressure on Non-Coaxial Elements

Figure 23

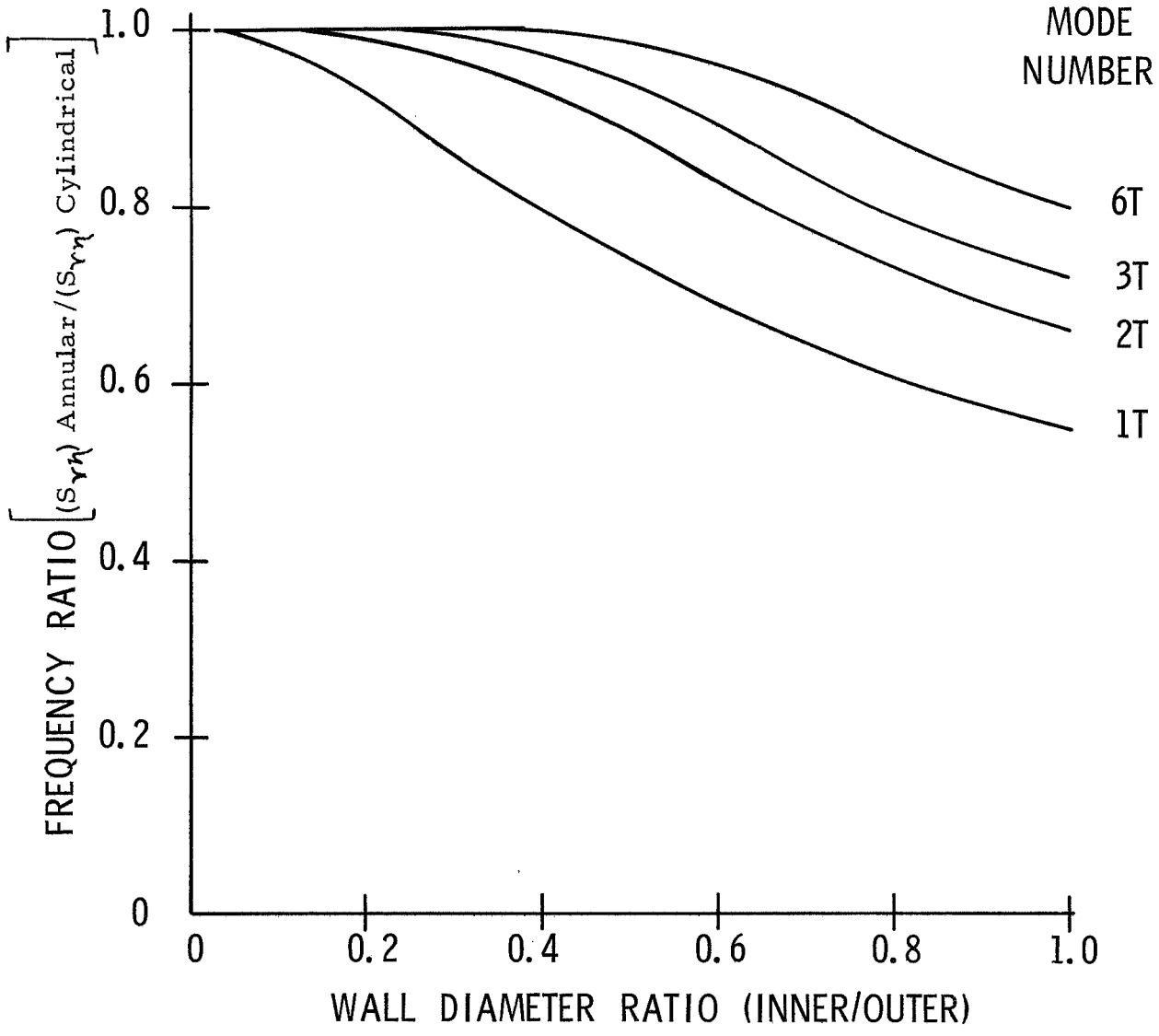

Tangential Mode Acoustic Frequencies for Annular Chambers

Figure 24

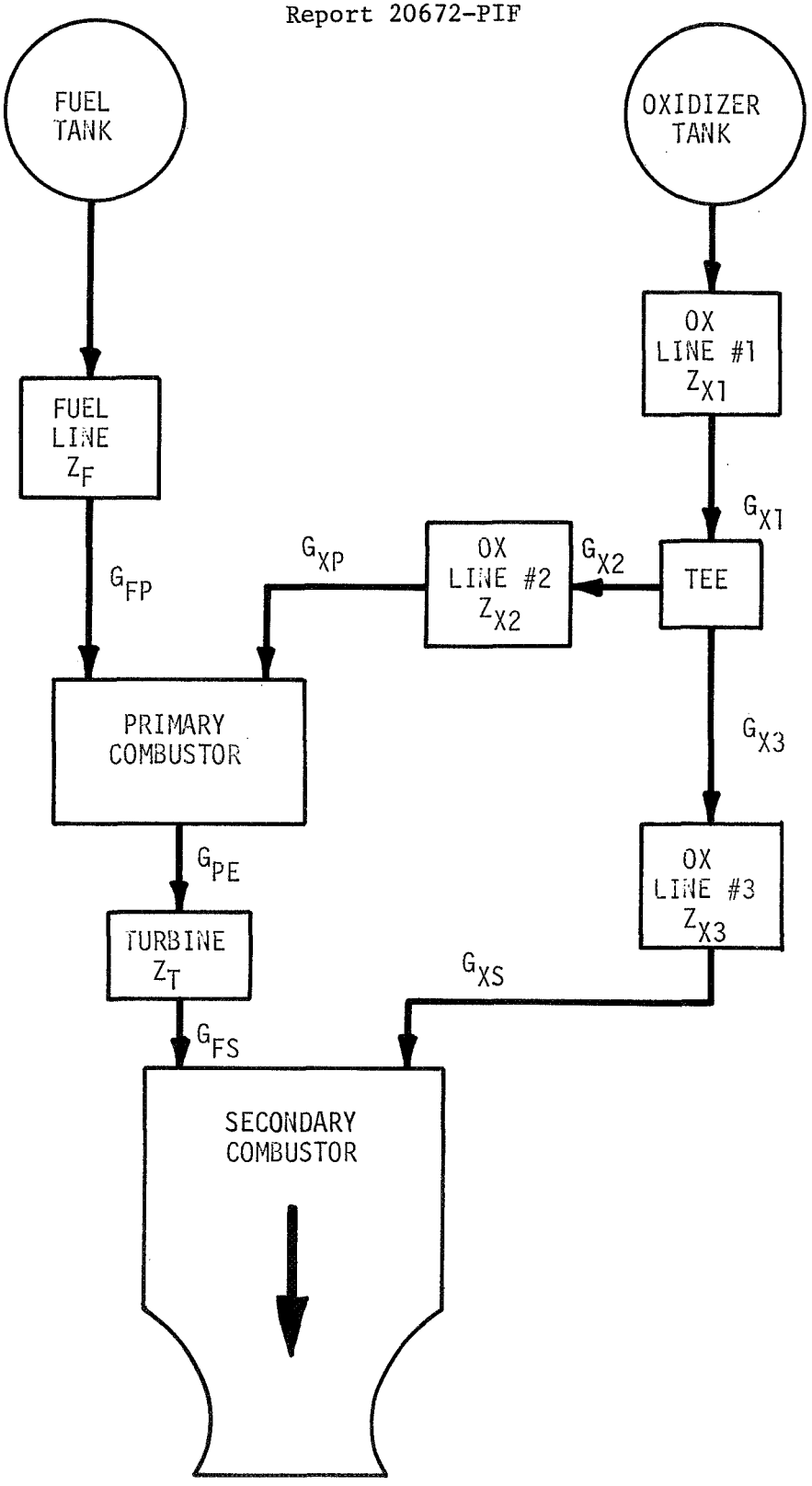

Staged Combustion Model

Figure 25

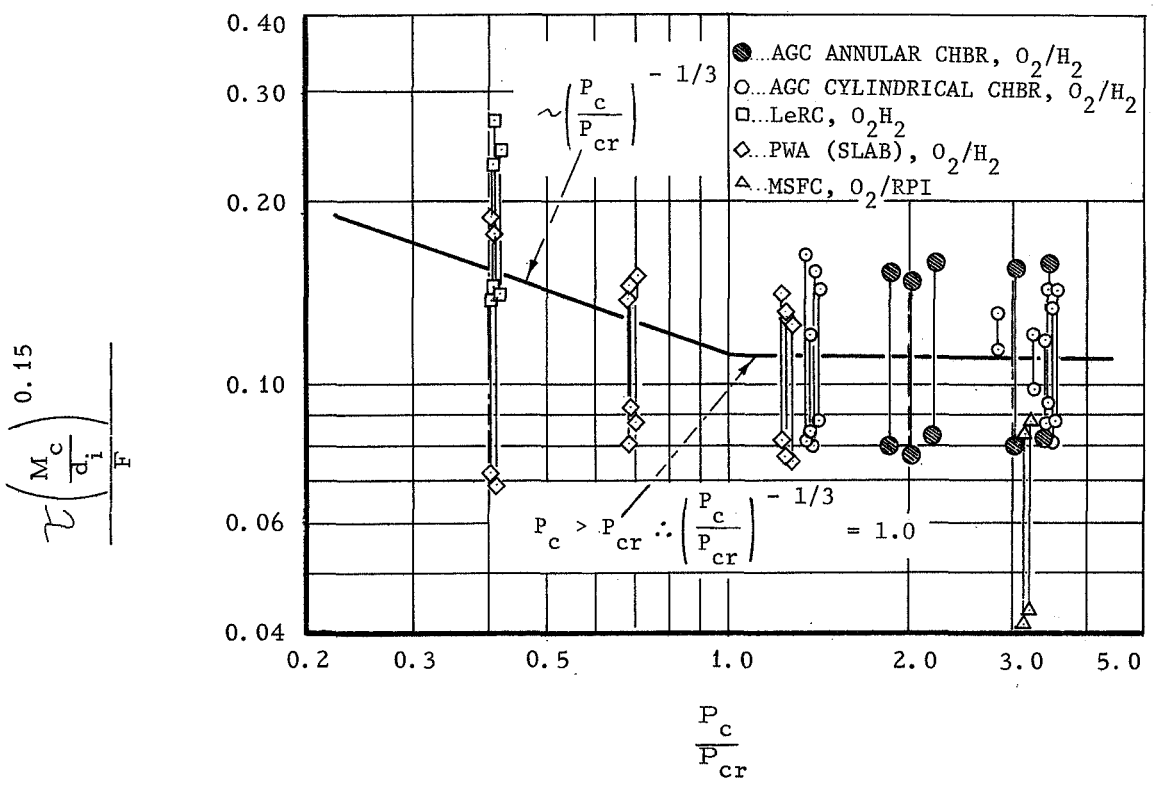

$$\frac{1000}{2 f_s} = \tau = 0.11 (d_i/M_c)^{0.15} (p_c/p_{cr})^{-1/3} F \qquad (P_c \leq P_{cr})$$

$$= 0.11 (d_i/M_c)^{0.15} F \qquad (P_c \geq P_{cr})$$

WHERE:

f_s = SENSITIVE FREQUENCY, hz

τ = TIME LAG, msec

d_i = INJECTION ORIFICE DIA (LEAST VOLATILE PROPELLANT), in.

P_{cr} = CRITICAL PRESSURE (LEAST VOLATILE PROPELLANT), psia

P_c = CHAMBER PRESSURE, psia

M_c = CHAMBER MACH NO.

VR = VELOCITY RATIO

ϕ = PROPELLANT IMPINGEMENT ANGLE

F = FUNCTION OF VELOCITY RATIO AND IMPINGEMENT ANGLE

Effect of Pressure on Impinging Coaxial Injectors

Figure 26

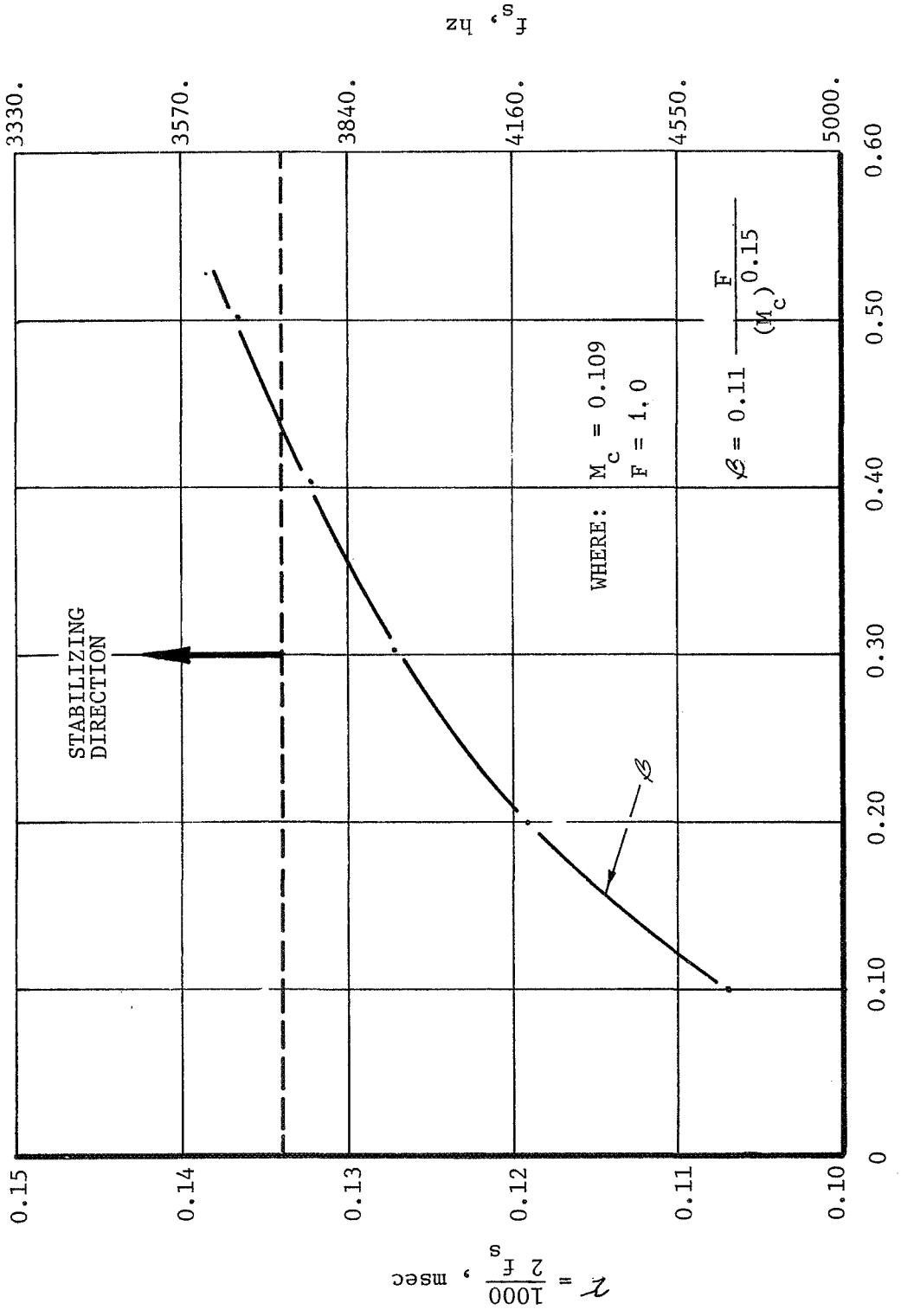

Case I, Orifice Diameter Versus Stability

Figure 27

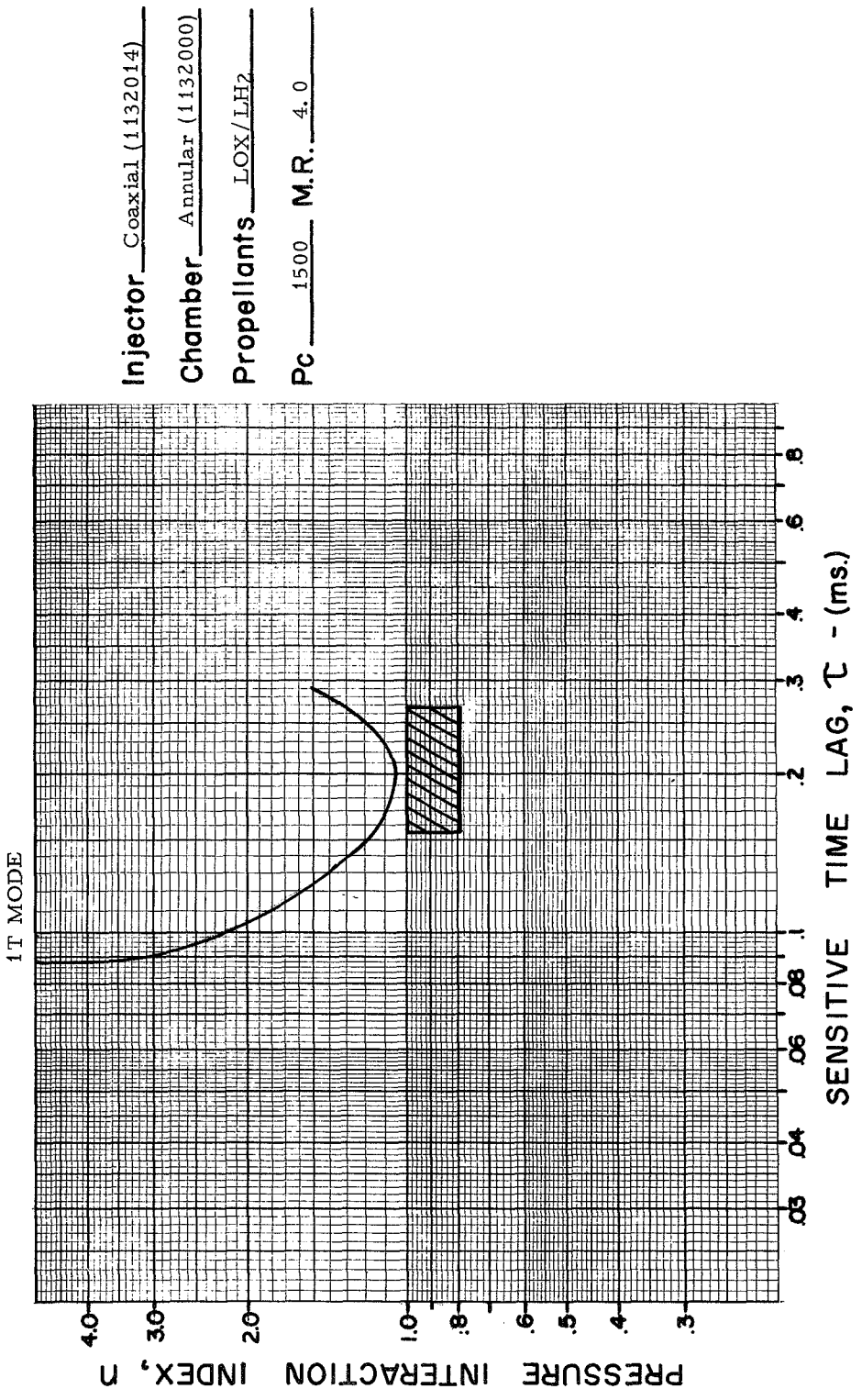

Case II, Orifice Diameter Versus Stability

Figure 28

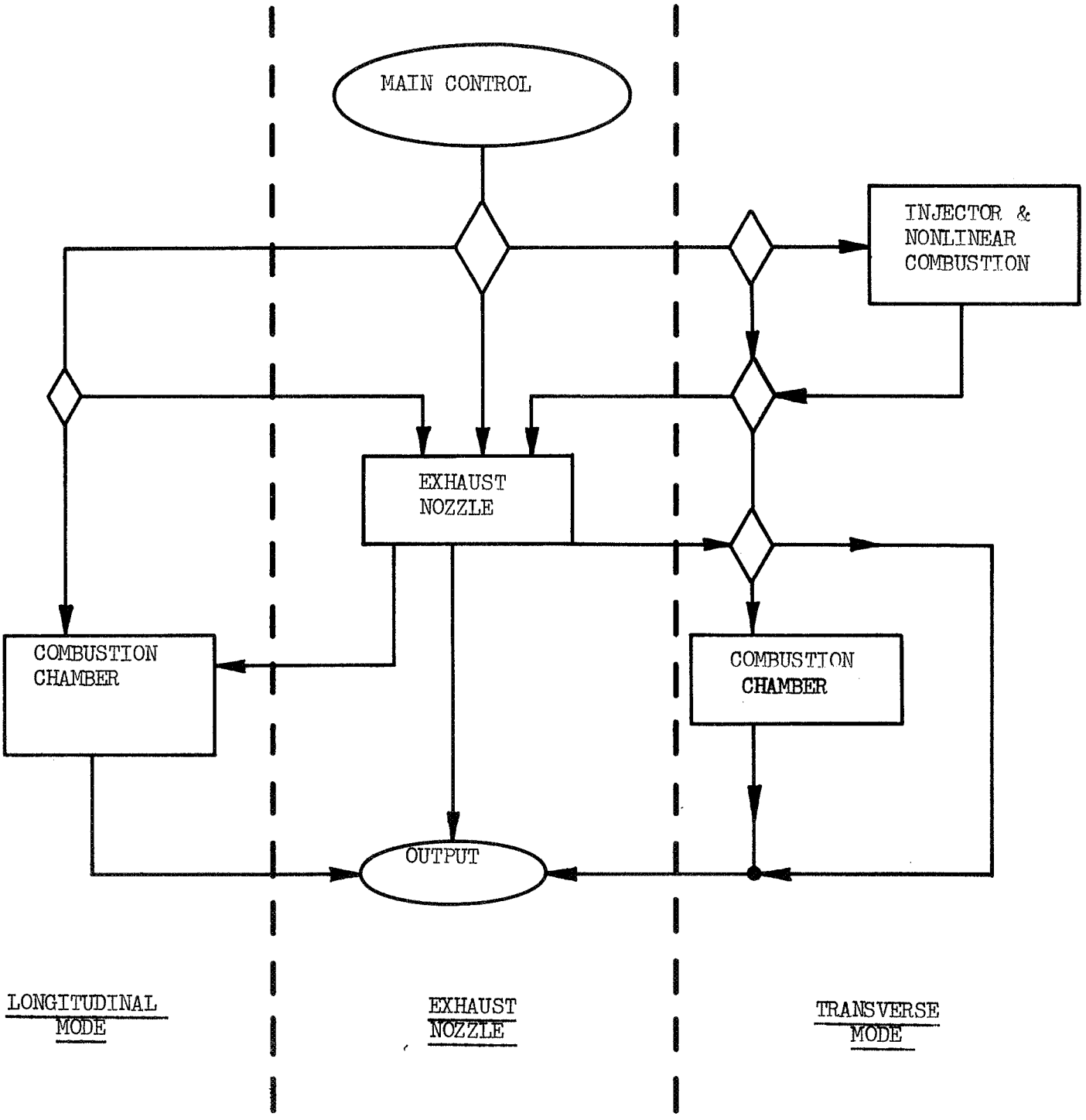

Computer Program Flow Schematic

Figure 29

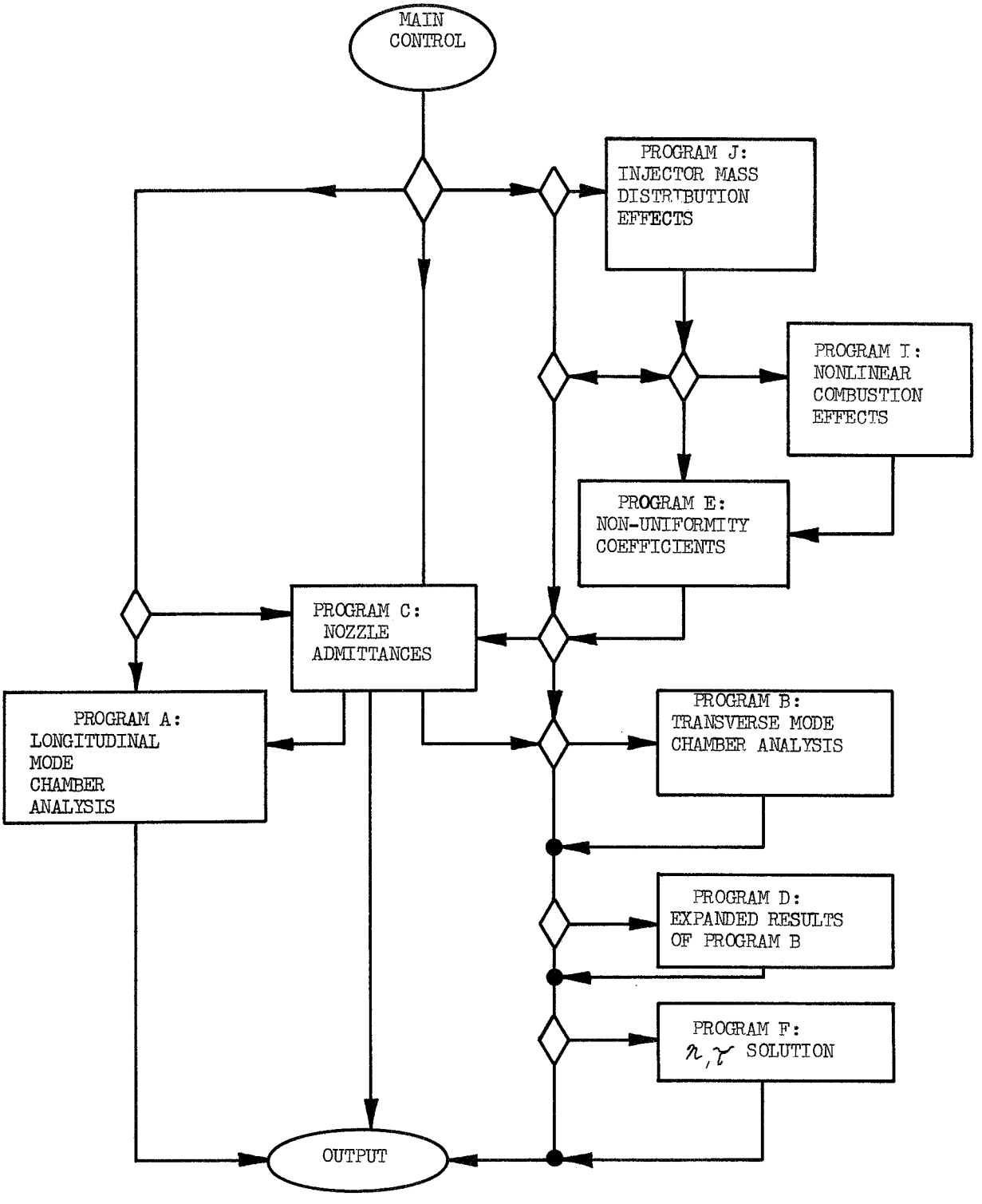

Computer Program Flow Schematic

Figure 30

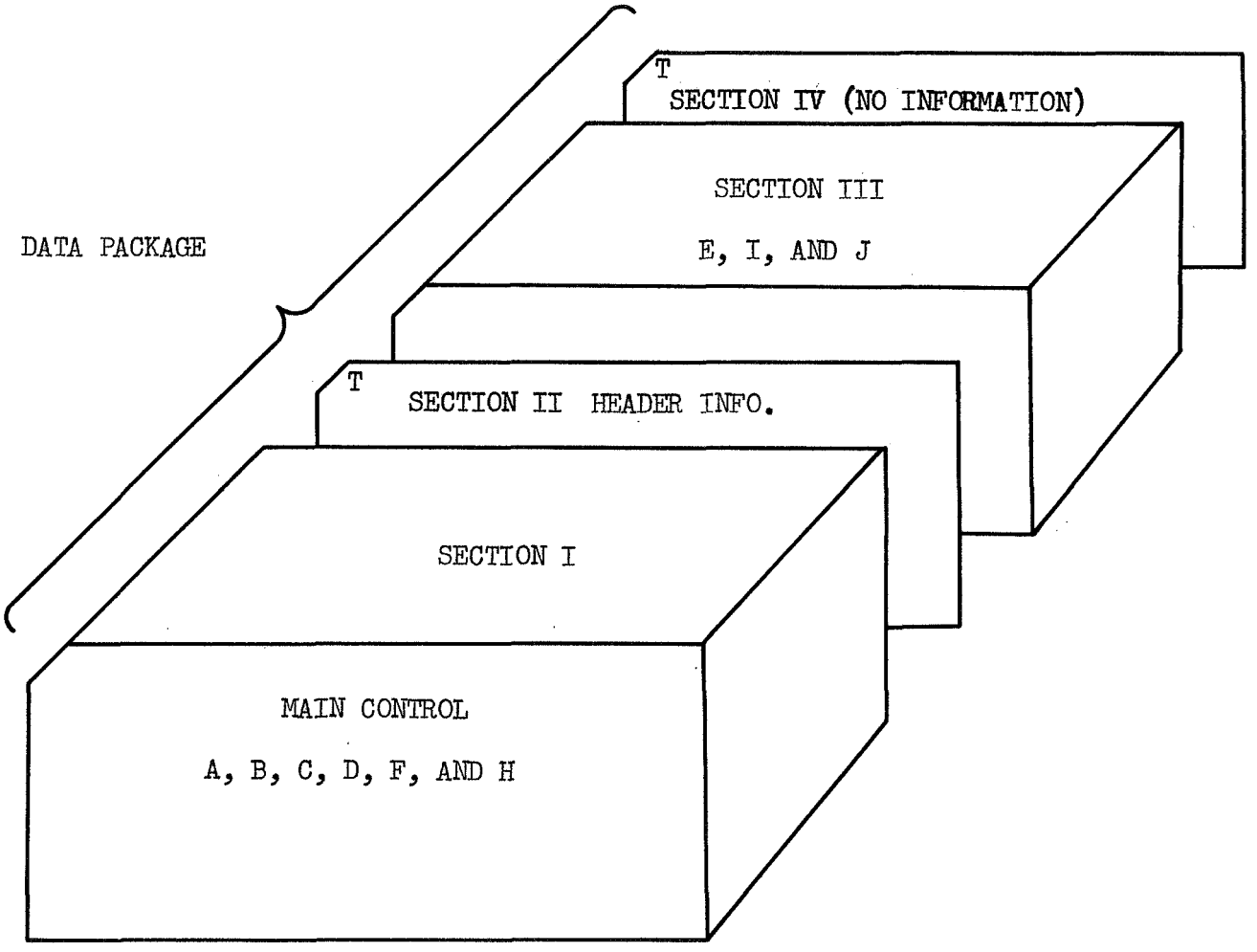

IF SECTION III IS NOT USED, SECTION IV MUST NOT BE USED.

Data Package Computer Deck Organization

Figure 31

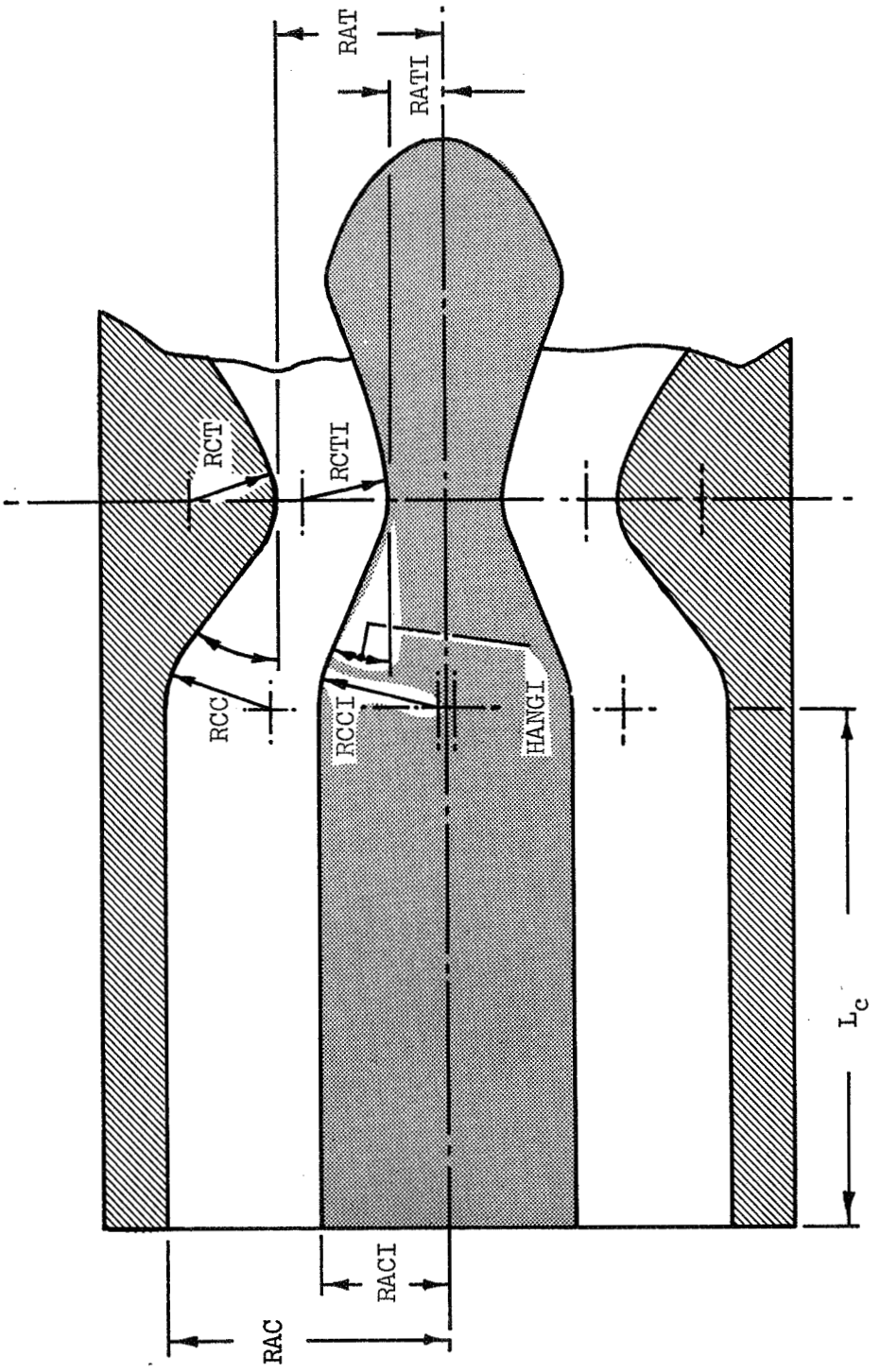

Annular Combustion Computer Input Parameters

Figure 32

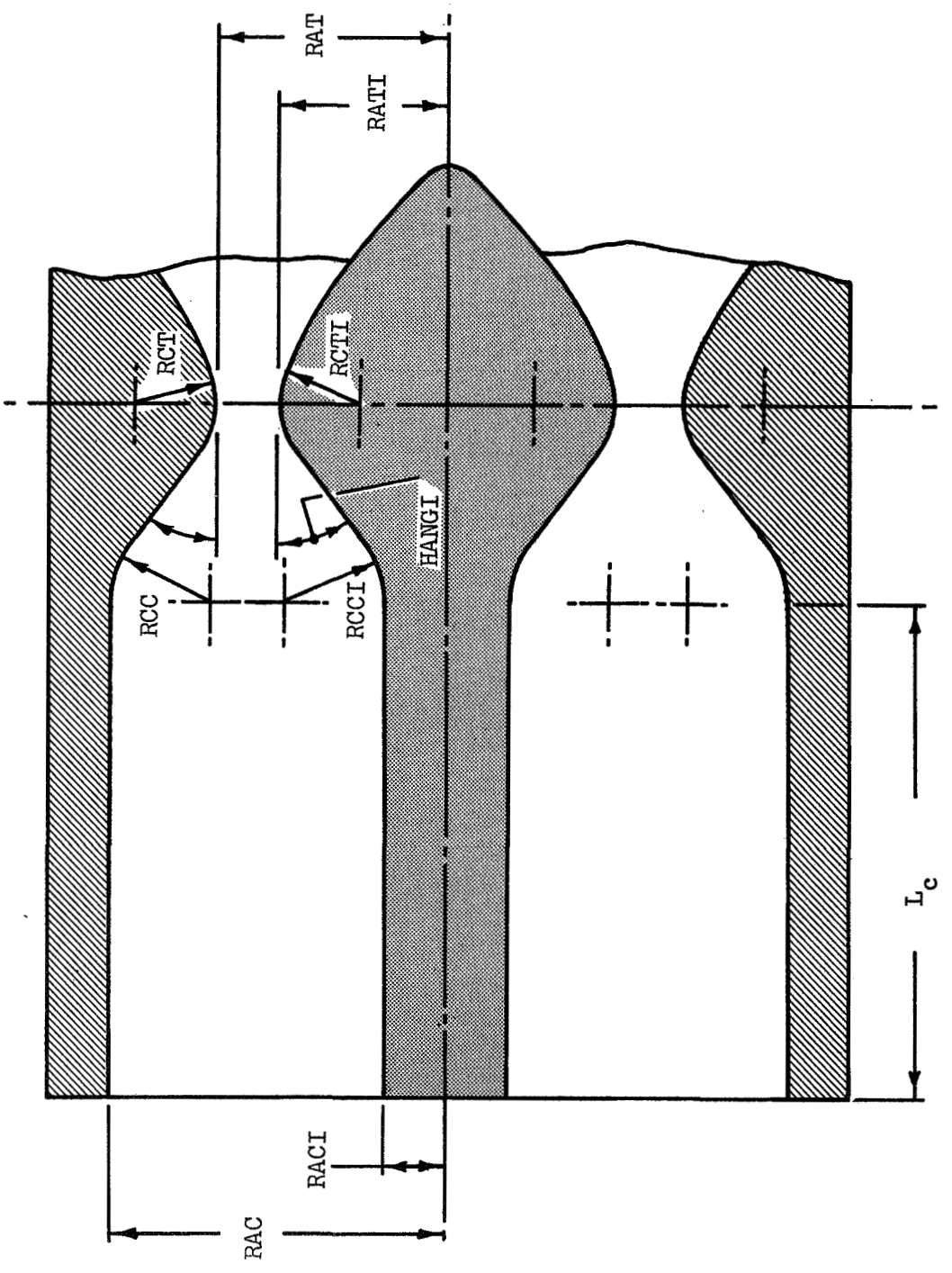

Annular Chamber Computer Input Parameters

Figure 33

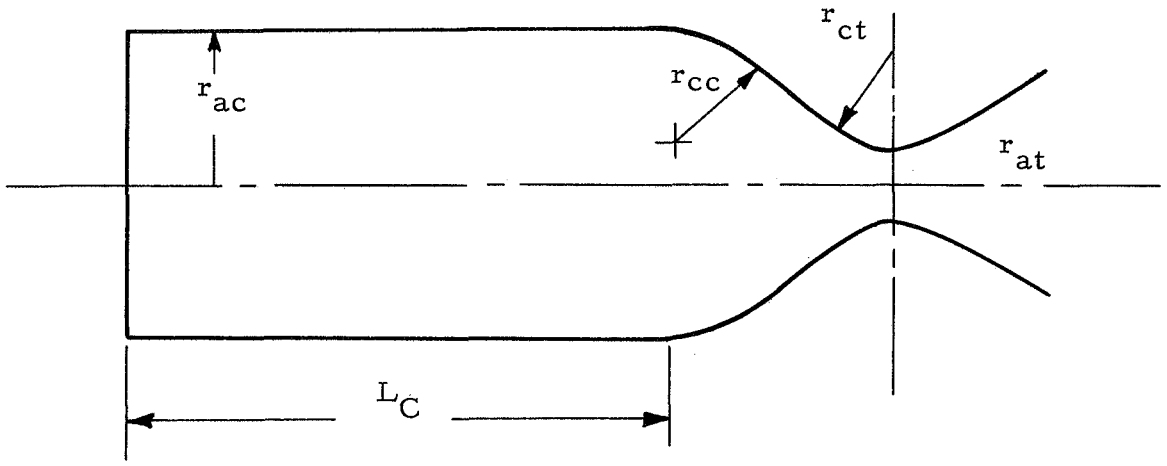

L_C = 14.8, in.

r_{ac} = 6.4, in.

r_{cc} = 3.0, in.

r_{ct} = 7.16, in.

r_{at} = 3.58, in.

α = 15.0°

Cylindrical Chamber Computer Input Parameters

Figure 34

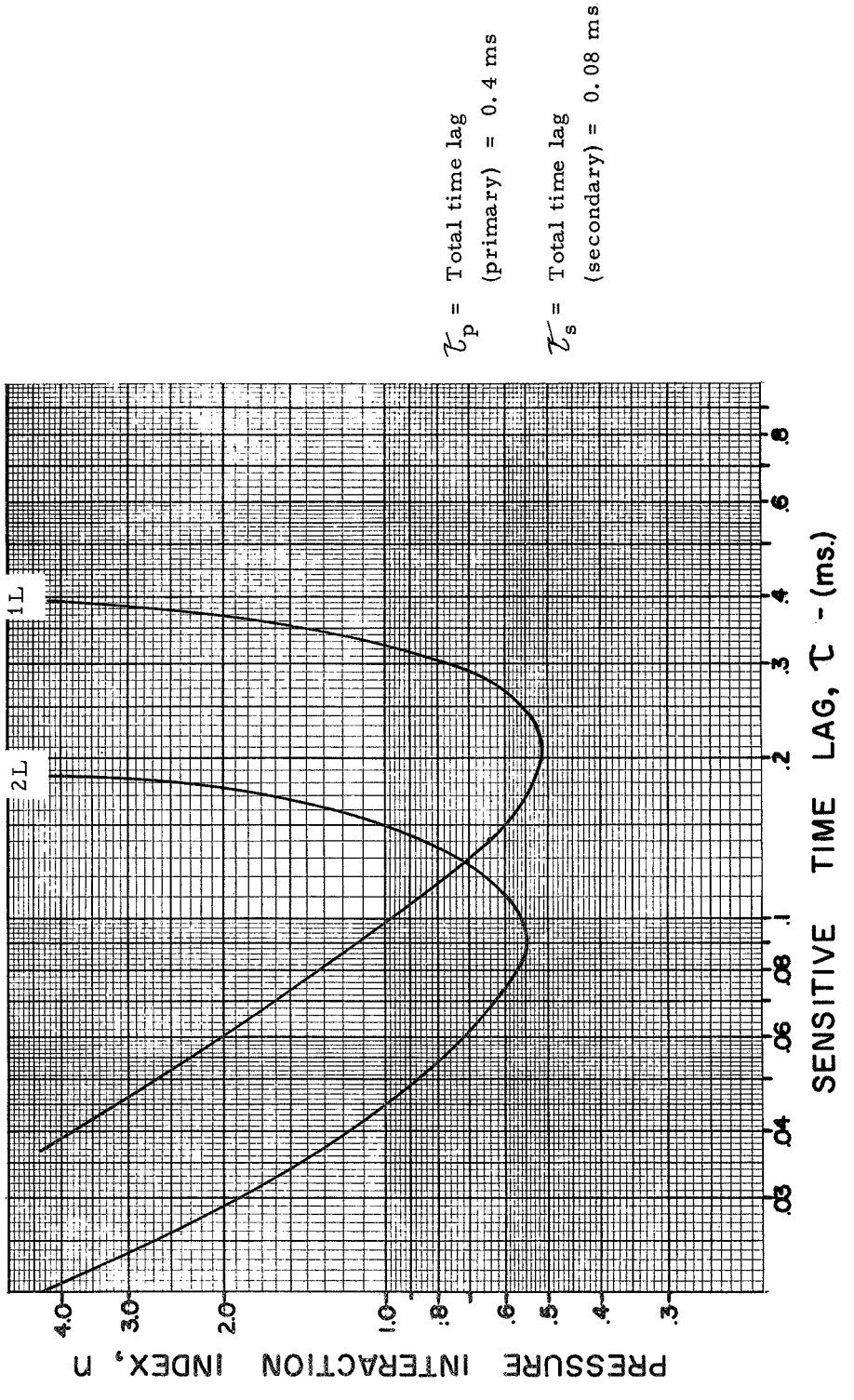

n, τ Plots

Figure 35

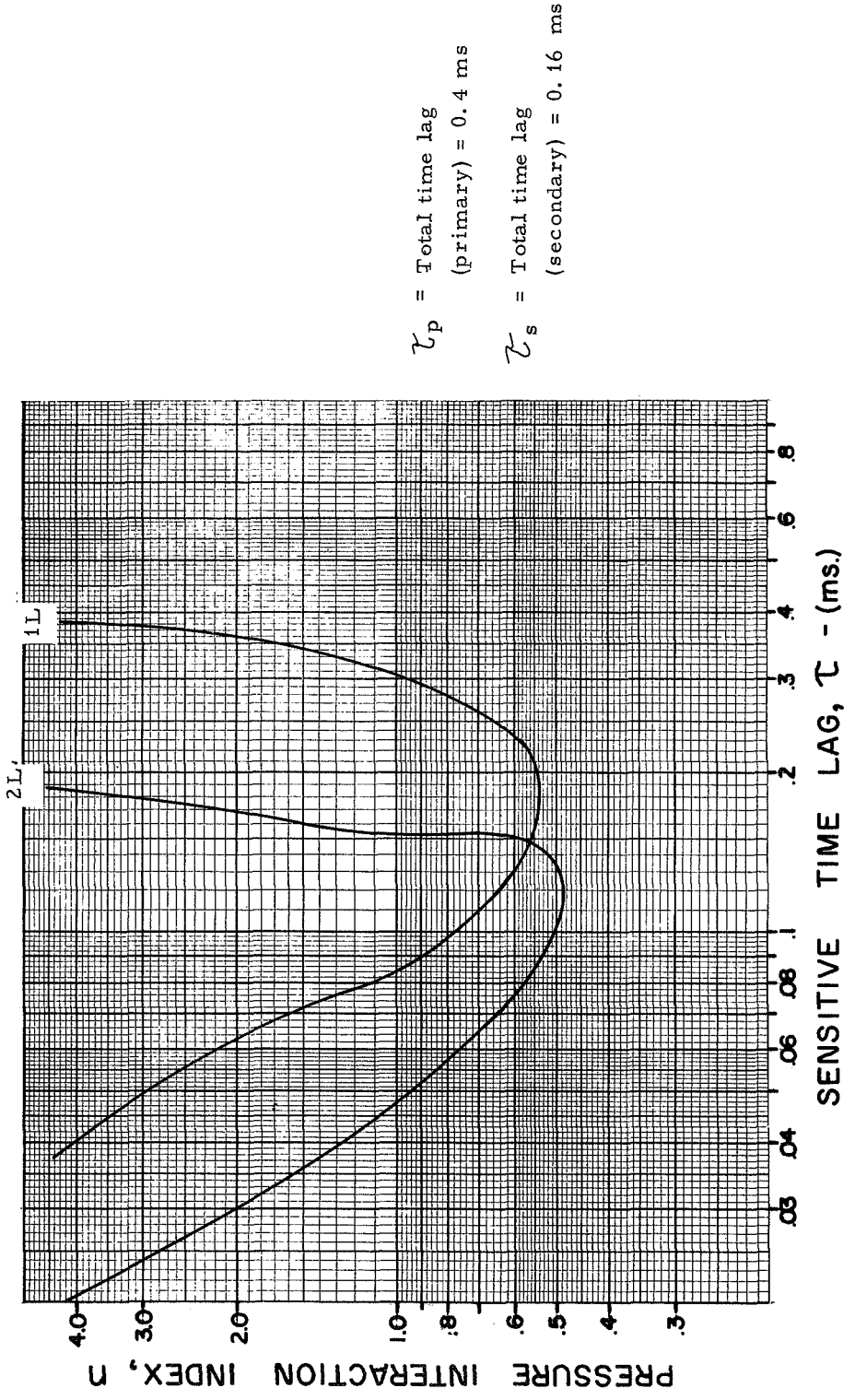

n, τ Plots

Figure 36

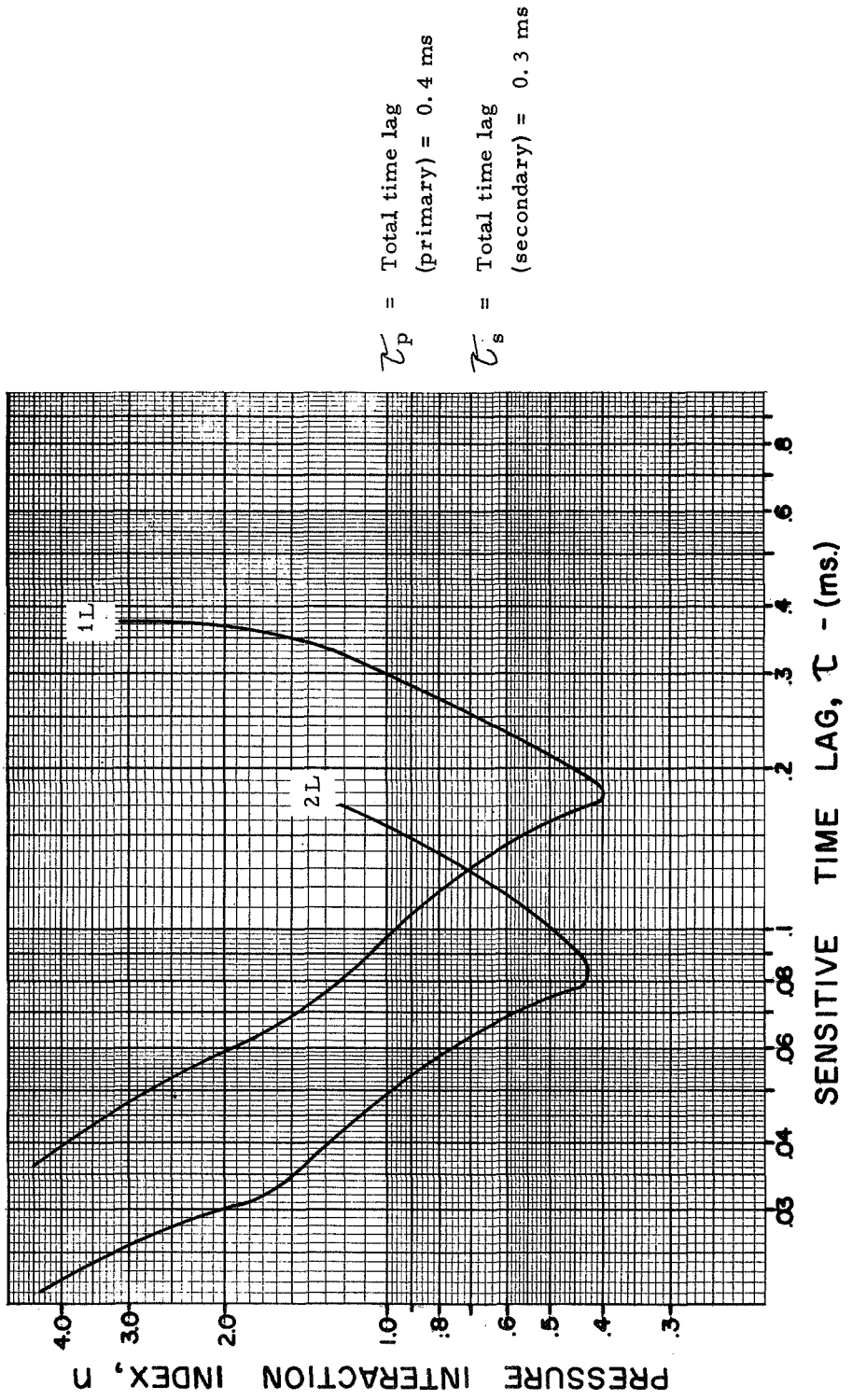

n, τ Plots

Figure 37

APPENDIX A

PRELIMINARY DESIGN DETAILS; DETAILED TEST RESULTS

TABLE OF CONTENTS

		Page
I.	Injector Design Studies	1
II.	Task IIA - Primary Combustor High Frequency Stability Characteristic	1
	A. General	1
	B. Injector Design Characteristics	2
III.	Task IIB - Secondary Combustor High Frequency Stability Characterization	3
	A. General	3
	B. Secondary Injector Design Characteristics	4
IV.	Task III - Low Frequency Stability Characterization	5
	A. General	5
	B. Injector Design Characteristics	6
V.	Task IV - High Injection Density Injectors	8
	A. General	8
	B. Injector Design Characteristics	8
VI.	Full Scale Test Results on the Annular Coaxial Injector	9
	A. Test 1100-D01-OM-001 (Satisfactory Test)	9
	B. Test 1100-D01-OM-002 (Satisfactory Test)	9
	C. Test 1100-D01-OM-003 (Satisfactory Test)	10
	D. Test 1100-D01-OM-004 (Satisfactory Test)	11
	E. Test 1100-D01-OM-005 (Unsatisfactory Test)	11
	F. Test 1100-D01-OM-006 (Satisfactory Test)	11
	G. Test 1100-D01-OM-007 (Satisfactory Test)	11
VII.	Test Results of Transverse Excitation Chamber Testing	12
	A. Test 1100-D02-OM-001, 10/20/67 (Unsatisfactory Test)	12
	B. Test 1100-D02-OM-002, 10/20/67 (Unsatisfactory Test)	13
	C. Tests 1100-D02-OM-003 and 004 (Fuel Valve Malfunction)	14
	D. Test 1100-D02-OM-005 (Satisfactory Test)	15
	E. Test 1100-D02-OM-006 (Satisfactory Test)	15

FIGURE LIST

	Figure
Coaxial Injector for Annular Gas Generator	1
Triplet (small Element) Injector for Annular Gas Generator	2
Triplet (Large Element) Injector for Annular Gas Generator	3
Concentric Sheet Injector for Annular Gas Generator	4
Four Injection Concepts for Staged Combustion System	5
Coaxial Injector for Trombone Engine	6
Triplet (Small Element) for Trombone Engine	7
Triplet (Large Element) for Trombone Engine	8
Concentric Sheet Injector for Trombone Engine	9
54-Element Triplet Injector for Annular Thrust Chamber Assembly	10
108-Element Triplet Injector for Annular Thrust Chamber Assembly	11
432-Element Triplet Injector for Annular Thrust Chamber Assembly	12
Concentric Sheet Injector for Annular Thrust Chamber Assembly	13
Damaged Injector Inserts from Test 002	14
Damaged Excitation Chamber	15
Damaged Injector Inserts from Tests 005 and 006	16

I. INJECTOR DESIGN STUDIES

The basic Contract NAS 8-20672 "Stability Characterization of Advanced Injectors" contained four discrete tasks. Task I was the continuation of analytical model development based on Sensitive Time Lag Theory. Task II consisted of determining the tangential high frequency response characteristics of gas generator assemblies, and the stability characteristics of staged combustion secondary injectors. Task III contained an evaluation of the longitudinal high frequency response characteristics of gas generator injectors. Task IV consisted of determining the effect of injection density on the stability of coaxial injection elements.

Designs were made for each of the injectors for the tasks mentioned above. Revisions to the basic contract excluded the fabrication and testing of injectors and components on Tasks II and III; these designs are discussed in this section. Task I did not include design of hardware and remained unchanged throughout the contract; Task IV remained, the hardware and test results are discussed in the text of this report. The designs presented were finalized after a study of injector parameters such as: injection density, pressure drop, orifice size, number of elements, scaleability and element distribution. These designs will be presented in the order of the respective contract tasks.

II. TASK IIA - PRIMARY COMBUSTOR HIGH FREQUENCY STABILITY CHARACTERISTIC

A. GENERAL

The primary combustor investigation was to be performed with an annular gas generator assembly (GGA) consisting of: 1) an 11.0 in. O.D. and a 9.25 in. I.D. annular combustion chamber, 2) two annular nozzles to allow two chamber pressure variations, and 3) an injector delivering liquid oxygen and liquid hydrogen. The annular configuration was to encourage the tangential mode of the high frequency instability. Design test operating conditions were:

II, A, General (cont.)

1. MR = 0.5 to 1.0
2. P_c = 2500 and 4000 psia
3. $\dot{w}_T$ = 60 lb/sec

B. INJECTOR DESIGN CHARACTERISTICS

Four types of injectors were designed and are shown in Figures 1, 2, 3, and 4:

1. Coaxial
2. High thrust per element triplet
3. Low thrust per element triplet
4. Concentric ring

Each injector had the following common design features.

Oxidizer velocity	=	150 ft/sec
Fuel velocity	=	525 ft/sec
Velocity ratio	=	3.5
Injector face area	=	28 in.

II, B, Injector Design Characteristics (cont.)

TABLE 1

TASK IIA ANNULAR GAS GENERATOR INJECTOR FEATURES

Parameter	Injector Type			
	Coaxial	Triplet	Triplet	Concentric Ring
Number of elements	18	18	72	10
Orifice size a) Fuel (in.)	0.416 OD Annulus	0.243 dia.	0.125 dia.	0.045 wide
b) Ox (in.)	0.175 dia.	0.175 dia.	0.086 dia.	0.023 wide
Oxidizer slot diameter (in.)	-	-	-	10.12
Impingement angle (deg)	Nonimpinging or 30	30	30	30
Element array	Circumferential	Radial	Radial	Circumferential
Manifold method a) Fuel	**	**	**	**
b) Ox	*	*	*	*

*Flooded annulus
**Drilled hole connected to flooded annulus

III. TASK IIB - SECONDARY COMBUSTOR HIGH FREQUENCY STABILITY CHARACTERIZATION

A. GENERAL

The secondary combustor investigation required a liquid/liquid primary combustor to produce the fuel rich gas for the gas/liquid secondary combustor. The primary or gas generator combustor was a 6 in. diameter cylindrical injector selected from Task III; these gas generator injectors will be discussed in Section IV of this Appendix. An orifice between the primary and secondary combustor simulates turbine pressure drops and also decouples low frequency interactions between the two combustion chambers.

III, A, General (cont.)

An 18 in. diameter to 14 in. diameter transition piece joined the cylindrical primary combustor to the annular secondary combustor. The fuel rich gas generator supplied gas at 1400°F - 1800°F to a secondary combustor which was designed to operate at a MR of 5.5, and a P_c of 1000 or 2500 psia and deliver 60,000 lb of thrust.

B. SECONDARY INJECTOR DESIGN CHARACTERISTICS

Four types of injectors (Figure 5) were designed for the secondary combustor: (1) coaxial, (2) high thrust per element spray bar, (3) low thrust per element spray bar and, (4) concentric ring. Manifolding was similar for all four units. Design and operating characteristics for these secondary injectors were:

1.	Oxidizer velocity	150 ft/sec
2.	Fuel velocity	525 ft/sec
3.	Velocity ratio	3.5
4.	Total flow rate	180 lb/sec
5.	Injector face area	90 in.

III, B, Secondary Injector Design Characteristics (cont.)

TABLE 2

TASK IIB SECONDARY COMBUSTOR INJECTOR FEATURES

Parameter	Injector Type			
	Coaxial	Spray Bar	Spray Bar	Concentric Ring
Number of elements	14	4	16	1
Orifice size				
a) Fuel (in.)	0.786 OD	0.723 wide	0.723 wide	0.51 wide outer 0.69 wide inner
b) Oxidizer (in.)	0.224 dia.	0.224 dia.	0.112 dia.	0.112 wide
Oxidizer slot diameter (in.)	-	-	-	11.5
Impingement angle (deg)	Non-impinging	Non-impinging	Non-impinging	30
Element array	Circum-ferential 2 rows	Radial	Radial	Circumferential
Manifold method				
a) Fuel	*	*	*	*
b) Oxidizer	**	**	**	**

*Flooded back
**Tube fed by outer annulus

IV. TASK III - LOW FREQUENCY STABILITY CHARACTERIZATION

A. GENERAL

This hardware was to evaluate the longitudinal modes of high frequency instability of various gas generator injectors in a variable length combustion chamber and then use the best candidate injector on Task IIB. The TCA consisted of a 6 in. diameter injector in a 6 in. diameter water-cooled,

IV, A, General (cont.)

variable-length chamber and an ablative nozzle. Test conditions used for the design were the same for the annular gas generator described in Section II.

MR = 0.5 to 1.0

P_c = 1,000 and 2,500 psia

Injection density = 3 lb/sec. $in.^2$

$\dot{w}_T$ = 60 lb/sec

B. INJECTOR DESIGN CHARACTERISTICS

Four injectors (6 in. diameter) as shown schematically in Figures 6, 7, 8, and 9 were designed for the 6-in.-diameter cylindrical gas generator. The injector types were as follows:

1. Coaxial
2. High thrust per element triplet
3. Low thrust per element triplet
4. Concentric ring

Each had the following design features:

Injection density	2.1 lb/sec-$in.^2$
Oxidizer velocity	150. ft/sec
Fuel velocity	525 ft/sec
Velocity ratio	3.5
Injector face area	28 in.

IV, B, Injector Design Characteristics (cont.)

A comparison of injection pattern design features is presented in Table 3.

TABLE 3

TASK III GAS GENERATOR INJECTOR PATTERN DESIGN FEATURES

	Injector Type			
	Coaxial	Triplet	Triplet	Concentric Ring
Number of elements	18	18	72	2
Orifice size				
a) Fuel (in.)	0.416 OD x 0.238 ID	0.242 dia.	0.122	4 at 0.045 wide
b) Ox (in.)	0.175 dia.	0.175 dia.	0.086	2 at 0.023 wide
Oxidizer slot diameter in.	-	-	-	3.54 outer 2.14 inner
Impingement angle (deg)	Non-impinging	30	30	30
Element array	Circum-ferential 2 rows	Skewed to radial ray	Circum-feren-tial 2 skewed rows	Circumferential 2 rows
Manifold method				
a) Fuel	*	*	*	***
b) Oxidizer	**	* + tubes	** + tubes	II

*Flooded back plate
**Flooded annulus
***Flooded annulus and drilled holes

V. TASK IV - HIGH INJECTION DENSITY INJECTORS

A. GENERAL

The purpose of this task was to study the effect of injection density and Mach number on combustion stability. The coaxial and triplet injectors designed and fabricated for the test program reported in Section V,A, of this report were designed as part of this task. The combustion chamber was an annular configuration formed from a cylindrical combustion chamber with a 10.50-in. inside diameter and a center plug with a 6.14-in. outside diameter. Test conditions are the same as those described in Section V,A, and are summarized as follows:

MR	= 5.5
P_c	= 1500, 2500 psia
Inj. Density	= 3.15 lb/sec $in.^2$
$\dot{w}_T$	= 180 lb/sec

B. INJECTOR DESIGN CHARACTERISTICS

In addition to the injector fabricated on this task, four other injectors were designed. Conceptual drawings of these designs are shown in Figures 10, 11, 12, and 13. The injectors include the following type:

1. 54-Element Triplet
2. 108-Element Triplet
3. 432-Element Triplet
4. Concentric Sheet

V, B, Injector Design Characteristics (cont.)

These injectors had the following design features in common:

Oxidizer velocity	- 150 ft/sec
Fuel velocity	- 525 ft/sec
Fuel temperature	- 80°R
Oxidizer ΔP	- 350 psi
Fuel ΔP	- 260 psi
Oxidizer include impingement angle	- 60°

VI. FULL SCALE TEST RESULTS ON THE ANNULAR COAXIAL INJECTOR

A. TEST 1100-D01-0M-001 (SATISFACTORY TEST)

This test was planned to operate at a chamber pressure of 1500 psia at a MR of 4.0 for 2.0 seconds utilizing S/N -1 chamber and a -1 nozzle (A_t = 28.3 in.^{2}) and a coaxial injector. The actual test was conducted at a P_c of 1430 psia and a MR of 6.24. The test was short in duration (1.60 seconds) because a voltage surge occurred when the first pulse gun was fired, which activated FS-2. Corrective action was taken by installing a larger resistor in the pulse charge electrical circuit. Slight erosion of the ablative liner was noted after this test; the final throat area was 32 in.^{2}. No streaking was noted; however, increased ablation and erosion were noted near the injector face. Three Photocon pressure transducers were damaged during the test. There was a 20% overpressure at start indicating a moderate start.

B. TEST 1100-D01-0M-002 (SATISFACTORY TEST)

This test was planned to operate at a P_c = 1500 psia, MR = 6, and fuel temperature = 80°R for a 2.0 second duration. There was no hardware changed after Test 001 except for replacement of the damaged Photocon pressure

VI, B, Test 1100 D01-OM-002 (Satisfactory Test) (cont.)

transducers. Actual average operating conditions of the test were P_c = 1244 psia, MR = 5.58 T_f = 126°R; the test went to full duration (1.94 sec). Thermal damage was noted on four Photocon transducers and the center body nozzle extension was missing after the test. Although the overall dimensional ablation of the liner was small, it was noted that the chamber had eroded a leak path in back of the ablative liner from the igniter port to the interface of the liner with the nozzle insert. The nozzle of an expended igniter was burned off and the threads were damaged. The damaged combustion chamber was removed from the stand for repair. A review after test indicated all pulse guns fired. There was a 30% overpressure at start indicating a moderately hard start.

C. TEST 1100-D01-OM-003 (SATISFACTORY TEST)

A new chamber and nozzle were installed on the coaxial injector. Modifications were made to the Photocon port configuration to alter the thermal conditions causing damage to the instruments. This change consisted of drilling a 0.312-in.-diameter hole in the liner (centered with the Photocon transducer) and gasketing the Photocon so as to produce a gap between the instrument pressure plate and the ablative liner of 0.100 $\pm$ 0.030 inches. This change permitted greater distribution of the thermal flux to the pressure transducer.

This test was planned to operate at P_c = 2500 psia, MR = 6.0, and $T_f \simeq$ 80°R for 2.0 seconds. The test was of full duration (2.0 seconds) but operating conditions were not achieved because of a valve actuation malfunction which caused the valves to open only 10%. The resultant chamber operating conditions were 465 psia at a MR of 3.73, with fuel temperature 113°R; all pulse guns fired. There was no evidence of damage after the firing; normal dimensional ablation was noted.

VI, Full Scale Test Results on the Annular Coaxial Injector (cont.)

D. TEST 1100-D01-0M-004 (SATISFACTORY TEST)

This test was a repeat of the operating conditions of Test 003 (P_c = 2500, MR = 6.0 and $T_f \approx 80°R$). The control system was altered for this test to reduce the P_c overshoot and thus soften the start and increase in valve actuation pressure to prevent malfunction as in Test 003. The hydrogen valve sequence was charged to ramp partially open before being controlled by the downstream injector pressure. The change resulted in the chamber pressure overshoot being held to under 2%. The test conditions which resulted were: P_c = 2400, MR - 5.77 and T_f = 108°R. The duration was less than 2 seconds because the combustion stability monitor signaled shutdown. Two Photocon transducers were damaged and required replacement. Light dimensional ablation was noted.

E. TEST 1100-D01-0M-005 (UNSATISFACTORY TEST)

The test conditions were P_c = 2500 psia, MR = 4.0 and $T_f \approx 80°R$. The prefire throat area was 19.45 square inches. Because of a malfunction, the valves failed to open the required amount. The malfunction resulted in a test duration of 1.10 seconds.

F. TEST 1100-D01-0M-006 (SATISFACTORY TEST)

This test was a repeat of the prior test conditions, (P_c = 2500, MR = 4.0 and $T_f \approx 80°R$). The hydraulic pressure which actuates the thrust chamber valves was again increased to assure valve opening. The test was conducted at a chamber pressure of 2320 psia, MR of 3.79 and a fuel temperature of 125°R. The duration was shortened by a decrease in chamber pressure which activated the thrust chamber pressure switch at 1.25 seconds. The final throat area was 19.45 $in.^2$ and after firing it was 20.20 $in.^2$. No streaking was observed.

VI, Full Scale Test Results on the Annular Coaxial Injector (cont.)

G. TEST 1100-D01-0M-007 (SATISFACTORY TEST)

This test was the final one on the coaxial injector. Planned operating conditions were: P_c = 1500 psia, MR = 6.0 and T_f = 200°R. Because of the decreased density of "warm" hydrogen the duration was set at 1.46 seconds. The test was shut down by the fuel depletion switch. The actual conditions were: P_c = 1440 psia, MR = 9.53 and T_f = 200°R. The prefire throat area was 20.20 square inches and increased to 22.25 square inches. Nominal dimensional ablation was noted.

VII. TEST RESULTS OF TRANSVERSE EXCITATION CHAMBER TESTING

A. TEST 1100-D02-0M-001, 10/20/67 (UNSATISFACTORY TEST)

Test hardware included a S/N 002 chamber with three eleven-element injector inserts with the corresponding -5 wedge and -11 nozzle. The planned test operating conditions were: P_c = 1500 psia, MR = 6.0, $T_f \approx$ 80°R for a 0.80 sec duration.

The test was conducted at a P_c of 960 psia and an estimated MR of 10.0. The actual value of MR was not obtained from test data because of severe flow fluctuations in both fuel and oxidizer systems. The test duration was 0.509 sec. Malfunction sequence circuitry signaled FS-2 when P_c failed to exceed 1,000 psi. The fuel temperature at the injector was 400°R. The narrow opening at the throat (0.630 in. wide by 0.250 in. high rectangular slot) and the 30 in. distance to the injector face made hardware inspection difficult. Evidence of slag on the wedge and a darkening of the injector face indicated that a slight erosion had occurred. A survey of the test data indicated a fairly soft start (no pressure spike), but the flow had not reached steady state.

VII, A, Test 1100-D02-0M-001, 10-20-67 (Unsatisfactory Test)(cont.)

The following changes were made before proceeding to the next test:

1. Oxidizer and fuel valve opening times were increased to reduce flow oscillations.

2. Duration time was increased to allow hydrogen temperature in the fuel manifold to reach a constant value.

3. The minimum P_c kill parameter was reduced to 1000 psia to 700 psia to prevent malfunction shutdown due to low initial P_c.

4. Fuel tank pressure was increased to obtain higher fuel flow to compensate for higher propellant temperatures in the fuel manifold.

B. TEST 1100-D02-0M-002, 10/20/67 (UNSATISFACTORY TEST)

The same hardware used for Test 001 was used for Test 002. The following conditions were desired; P_c = 1500 psia, MR = 6.0, fuel temperature ≈ 80°F. The test was conducted at a chamber pressure of 1000 psia for a duration of 1.050 sec.

The average fuel temperature was 250°R. Inspection of the hardware after the test indicated that severe erosion had occurred at the face of the injector. The oxidizer orifices of the central injector were totally eroded away exposing the oxidizer manifold, and the fuel orifices were eroded until only tubes remained where the central fuel post was. A view of the injectors after removal from the chamber is shown in Figure 14. Removal of the lid revealed that both the lid and chamber cavity were similarly eroded (Figure 15); damage to the wedge was slight. A review of the oscillograph record indicated that the oxidizer orifices burned out at FS-2. The flow oscillations were not

VII, B, Test 1100-D02-OM-002, 10/20/67 (Unsatisfactory Test) (cont.)

as severe as those of Test 001 and were damped by 0.8 sec. Although the fuel temperature was decreasing with time, the rate was insufficient to approach the desired H_2 temperature conditions within the practical test duration. The changes in the test setup which were made after Test 001 improved operating conditions but did not totally eliminate the propellant transport problem. Prior to the next test the following changes were made:

1. An orifice was placed in the oxidizer line to harden the system and reduce the flow oscillations due to manifold pressure surge.

2. The manifold volume was reduced and a jacket to cool the remaining manifold with liquid nitrogen was added.

3. The system was balanced for a MR = 4.0 test using the temperature of liquid N_2 in the jacket around the fuel manifold as the expected fuel temperature.

C. TESTS 1100-D02-OM-003 and 004 (FUEL VALVE MALFUNCTION)

S/N 001 chamber was assembled with a -3 chamber wedge and a -21 nozzle. This configuration included four injector inserts in a 19.8° chamber. Operating conditions included an MR of 4,0 with an expected fuel temperature of 150°R at the injector and a P_c of 1500 psia.

Both tests were unsatisfactory due to a malfunctioning fuel valve. The malfunction was at first thought to be insufficient hydraulic actuation pressure; however, the problem continued after system changes were made to accommodate a 30% increase in actuation pressure. After Test 004 the problem was found to be a frozen actuation discharge line which was immediately rerouted.

VII, Test Results of Transverse Excitation Chamber Testing (cont.)

D. TEST 1100-D02-0M-005 (SATISFACTORY TEST)

The test was conducted using chamber S/N 001 having a 19.8° chamber angle, a -3 wedge and a -21 nozzle insert. Four -3 injector inserts were used which had 11 triplet elements per injector. The planned test conditions were: P_c = 1500 psia, fuel temperature at the injector = 150°R and MR = 4.0 with a test duration of 0.75 sec. The flow oscillation problem encountered in the first two tests was overcome by the increase in valve opening time and placement of an orifice in the fuel line. The nitrogen jacket on the fuel manifold allowed a lower fuel injection temperature to be attained (110°R compared to 315°R for the same time from FS-1 on Test 002). The engine was shutdown at 0.595 seconds by the timed thrust chamber pressure switch. Actual operating conditions were as follows: P_c = 1390 psia, MR = 3.64, and T_{fJ} = 110°R.

Inspection of the hardware after the test indicated that erosion had taken place on the face of the injector inserts; therefore, two of the four injectors were replaced. The two with the most severe face erosion were located in the center of the chamber and thus would be subjected to the greatest transverse velocity effects. This was also the case with the damage noted after Tests 001 and 002. A photo of the injectors after Test 005 is shown in Figure 16 in the same order as removed from the excitation chamber. The two outboard injectors were retained for Test 006 and the two center injectors were replaced. The chamber was not damaged and was ready for retesting as soon as the injector inserts were replaced.

E. TEST 1100-D02-0M-006 (SATISFACTORY TEST)

The hardware used for this test was the same as was used for Test 005, except that the two center injector inserts were replaced. The planned test conditions were as follows: P_c = 1500 psia, MR = 5.0 and T_{fJ} = 150°R with a test duration of 0.7 seconds. The engine was shut down at 0.675 sec by the

VII, E, Test 1100-D02-0M-006 (Satisfactory Test) (cont.)

FS-2 timer. The actual operating conditions for the test were: MR = 3.62, P_c = 1370 psia and T_{fJ} = 150°R. After FS-2 a Photocon pressure transducer burned out, allowing a hot gas flow path which subsequently eroded the transducer port. Erosion of injectors similar to that experienced during Test 005 was observed, and these injectors are shown in Figure 16b in the same order as removed from the excitation chamber.

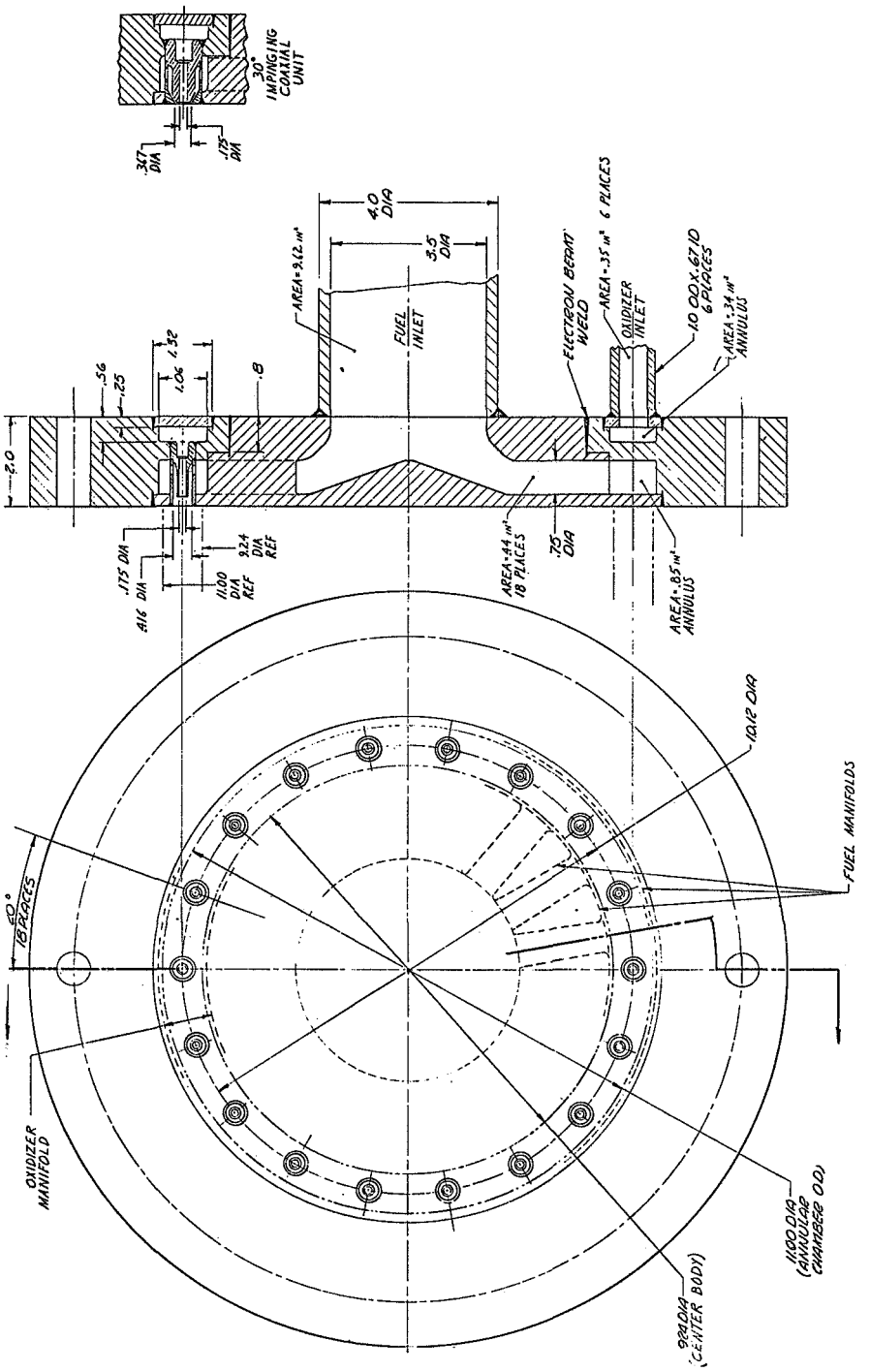

Coaxial Injector for Annular Gas Generator

Figure 1

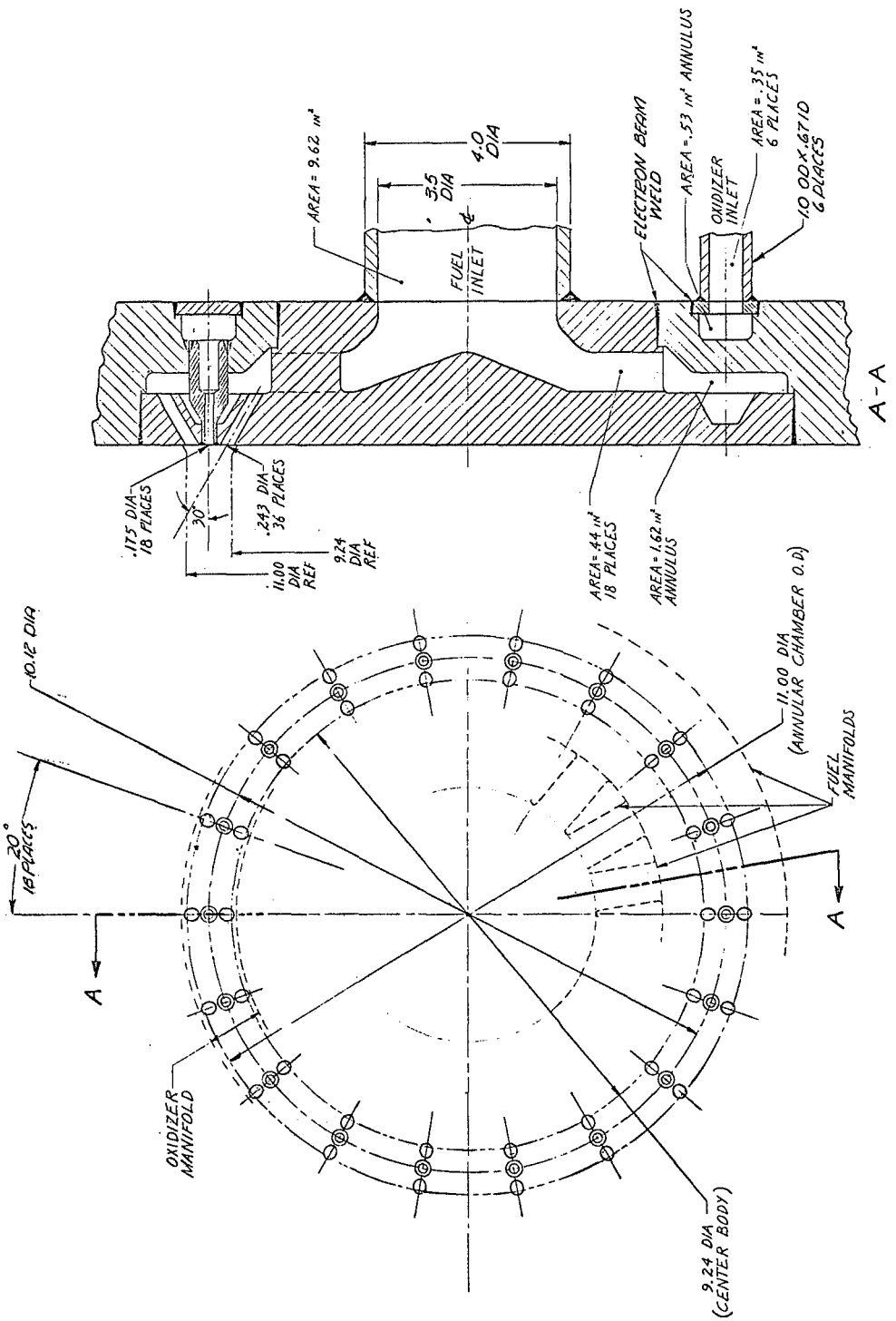

Triplet (small Element) Injector for Annular Gas Generator

Figure 2

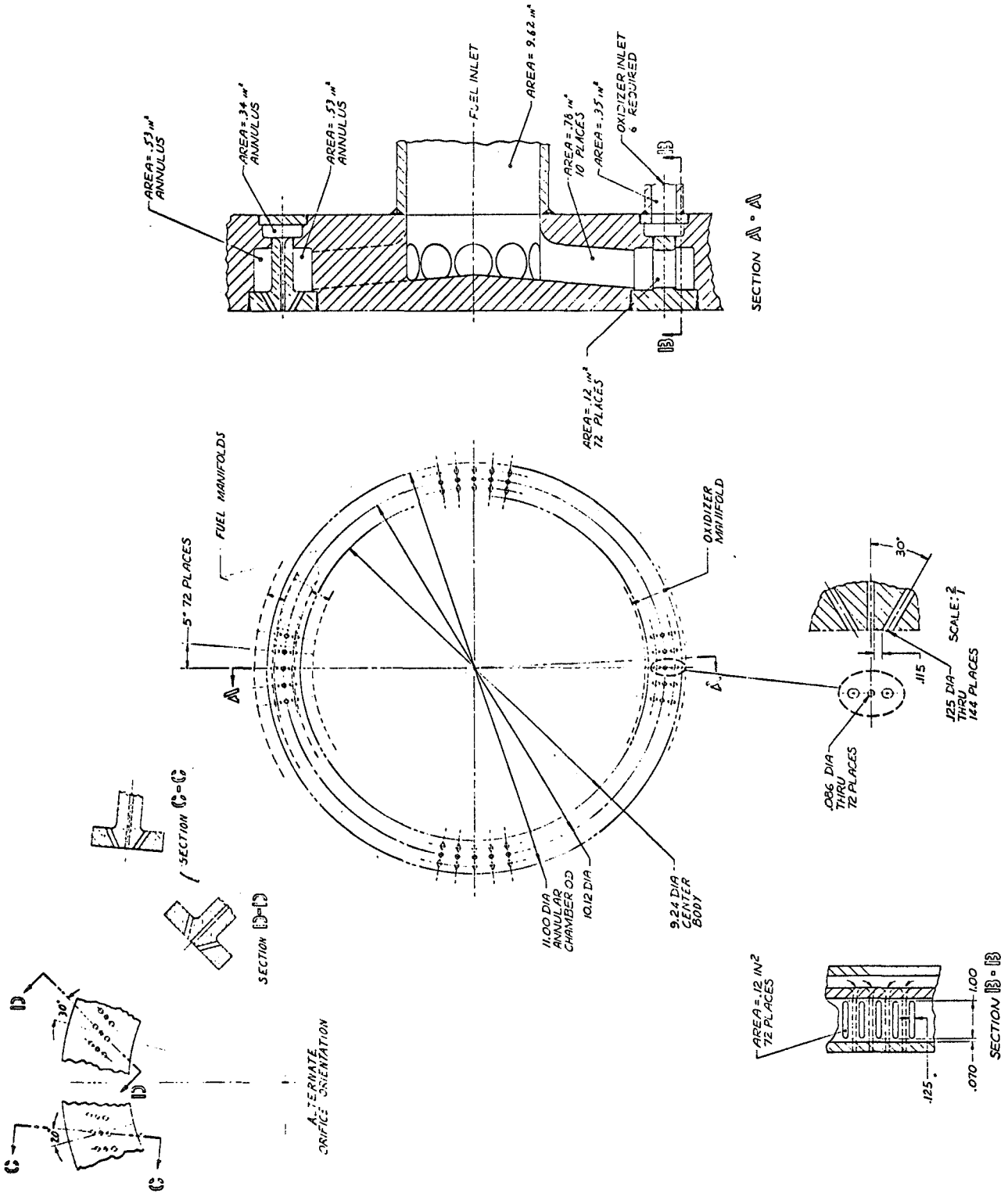

Triplet (Large Element) Injector for Annular Gas Generator

Figure 3

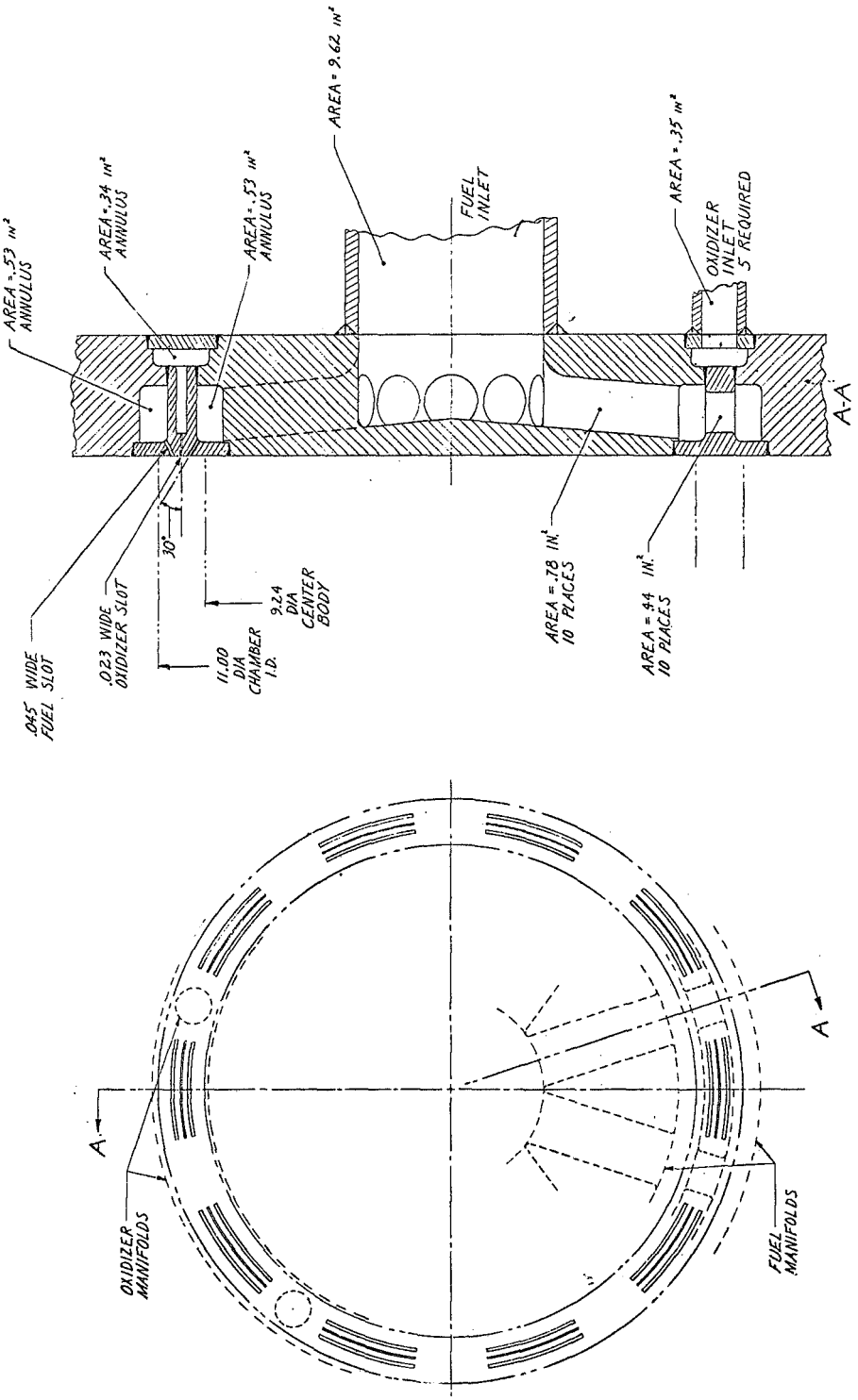

Concentric Sheet Injector for Annular Gas Generator

Figure 4

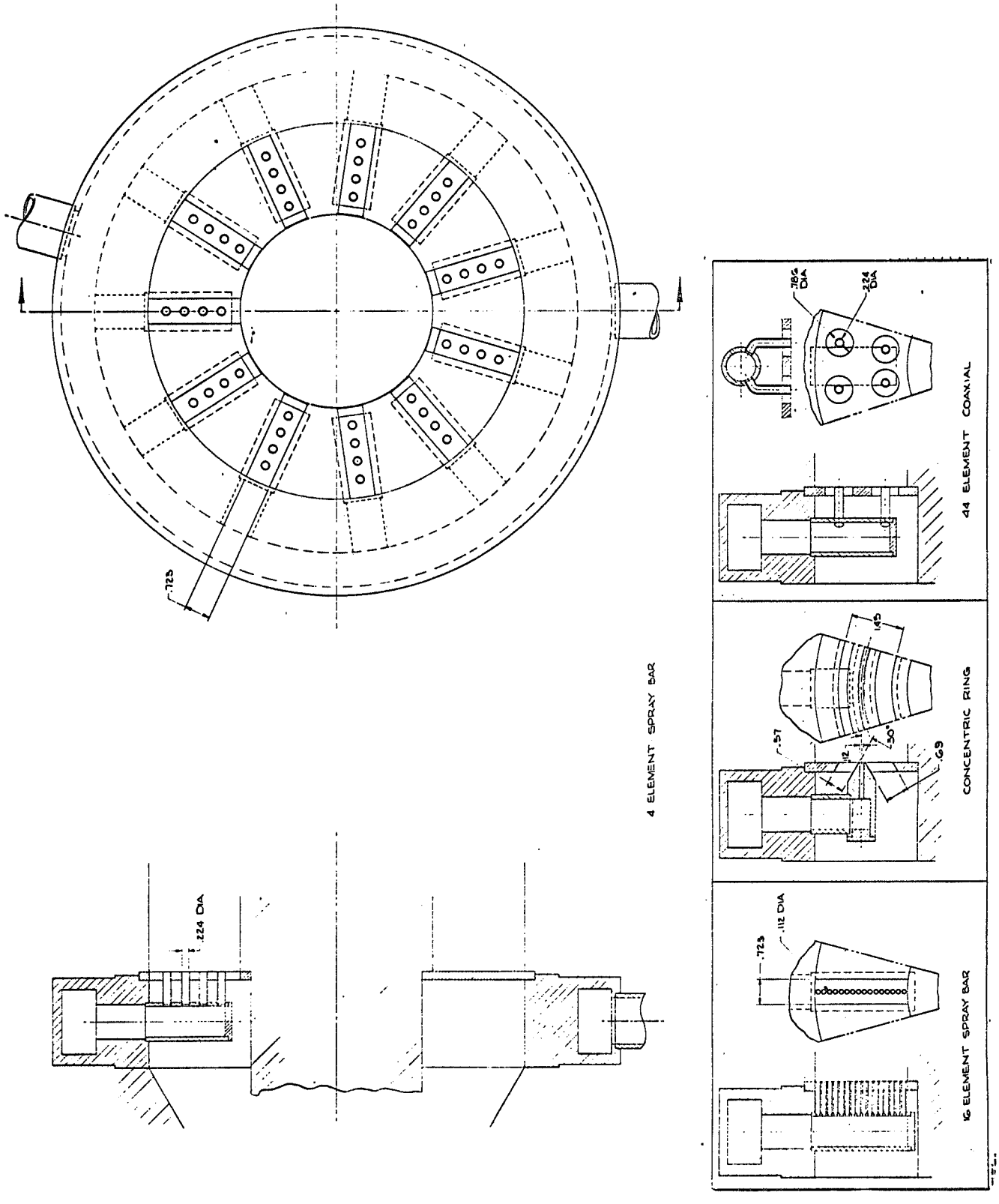

Four Injection Concepts for Staged Combustion System

Figure 5

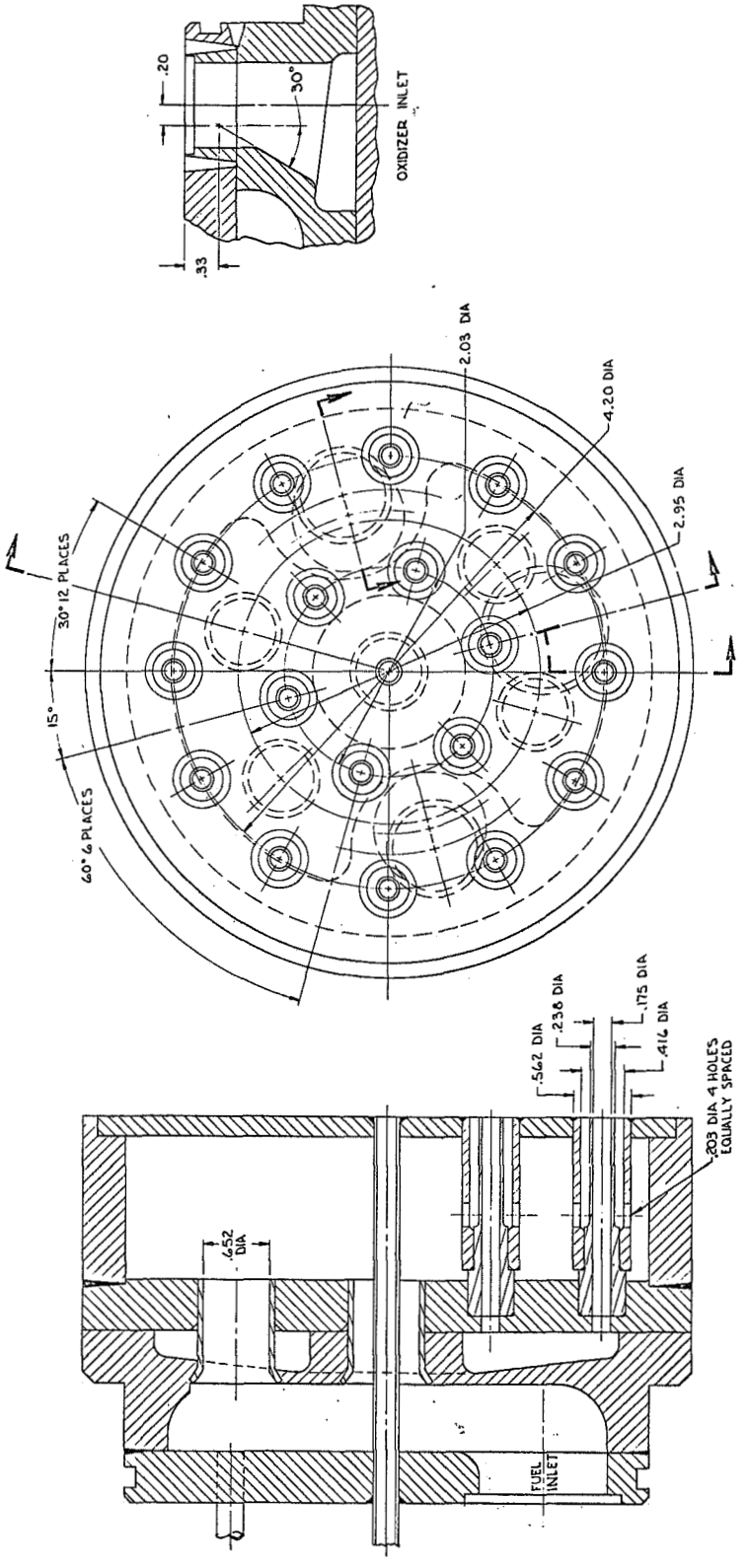

Figure 6

Coaxial Injector for Trombone Engine

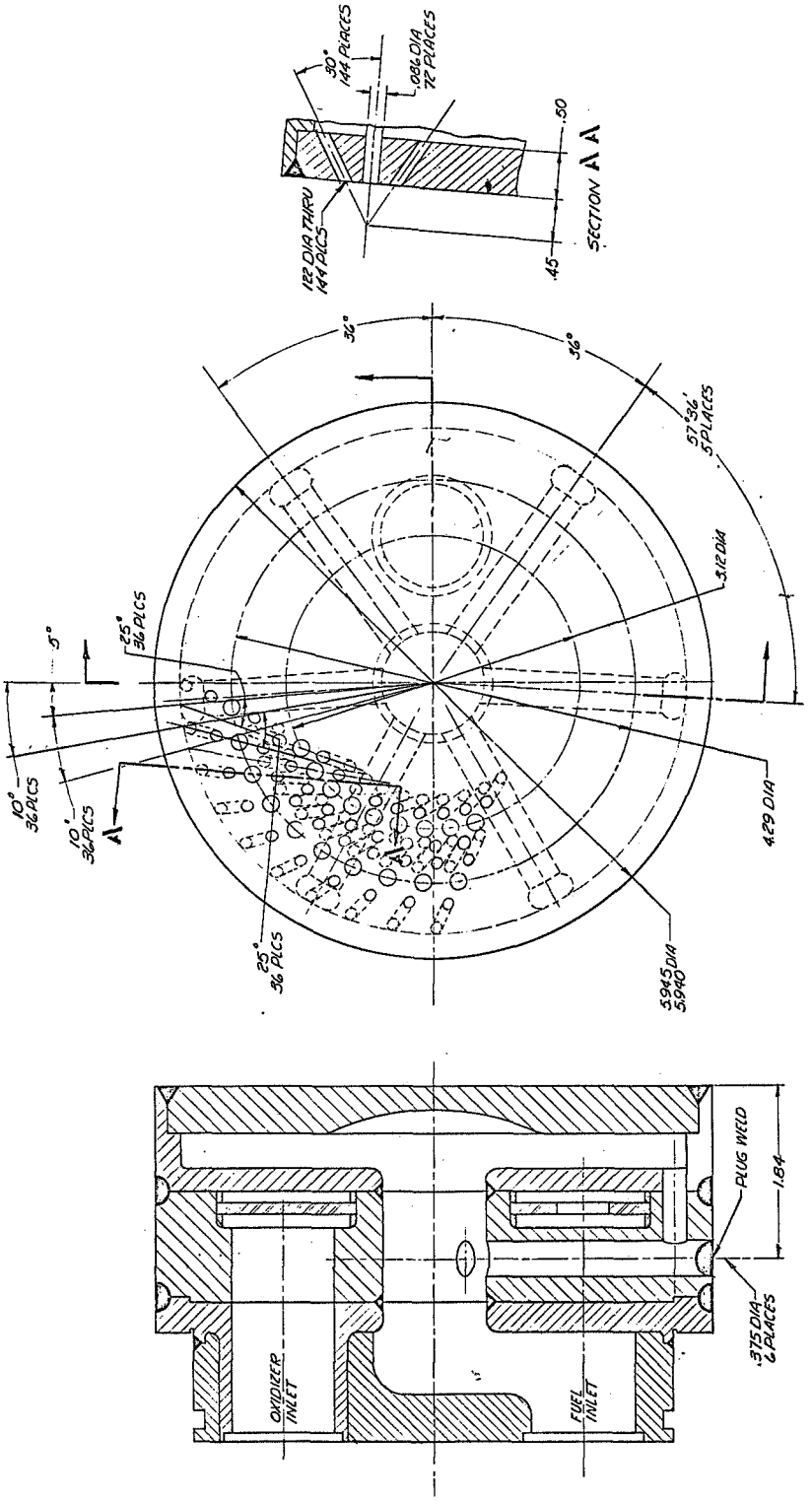

Figure 7

Triplet (Small Element) for Trombone Engine

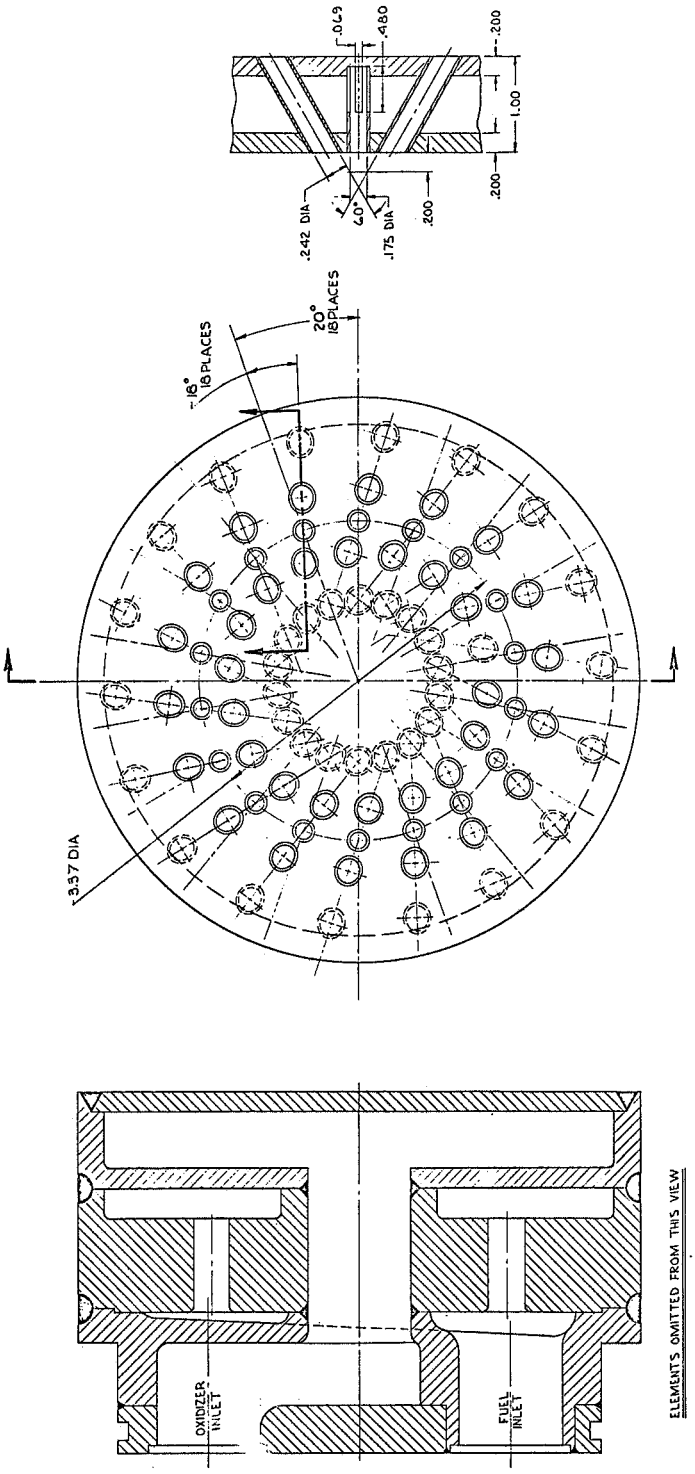

Triplet (Large Element) for Trombone Engine

Figure 8

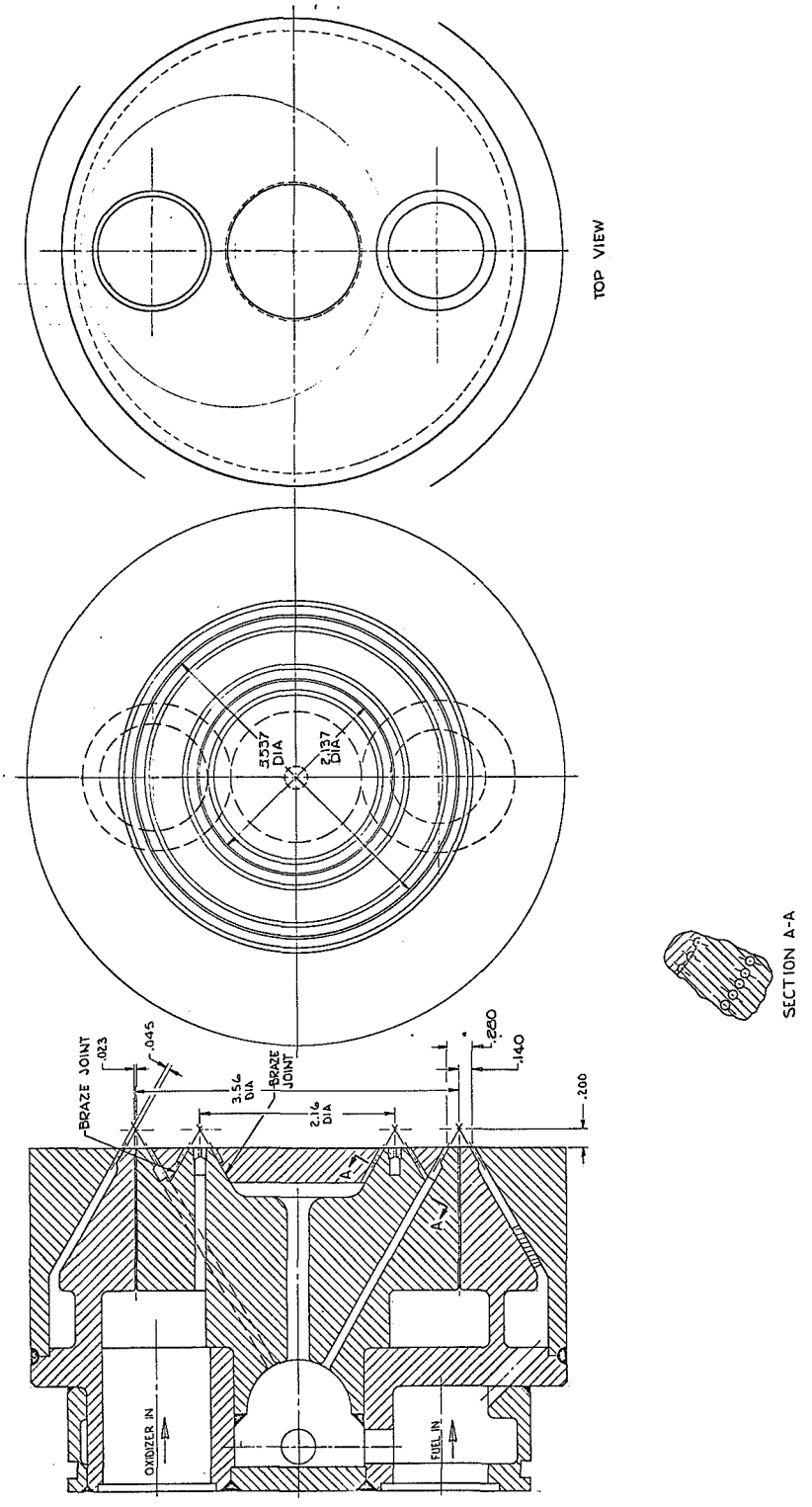

Figure 9

Concentric Sheet Injector for Trombone Engine

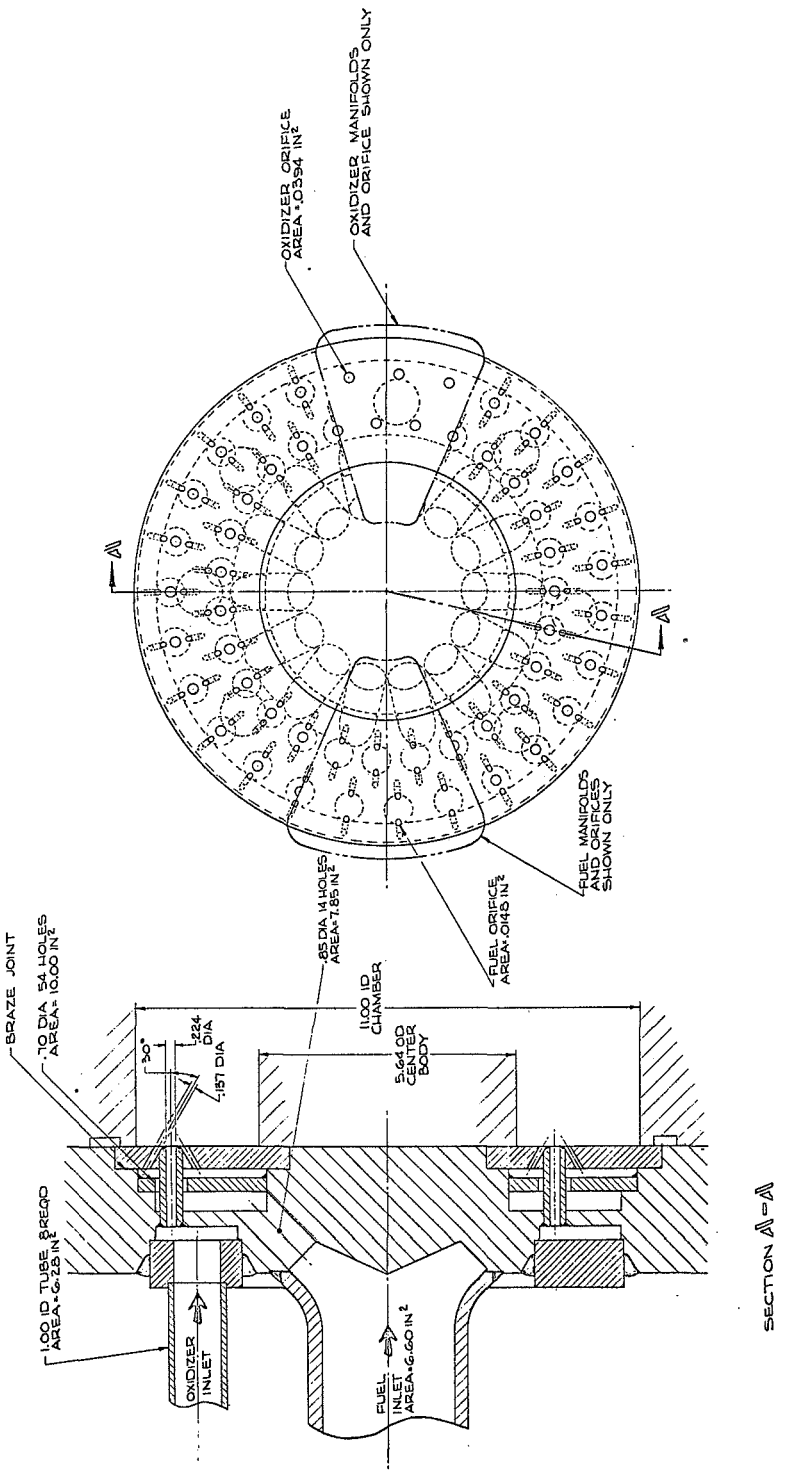

54-Element Triplet Injector for Annular Thrust Chamber Assembly

Figure 10

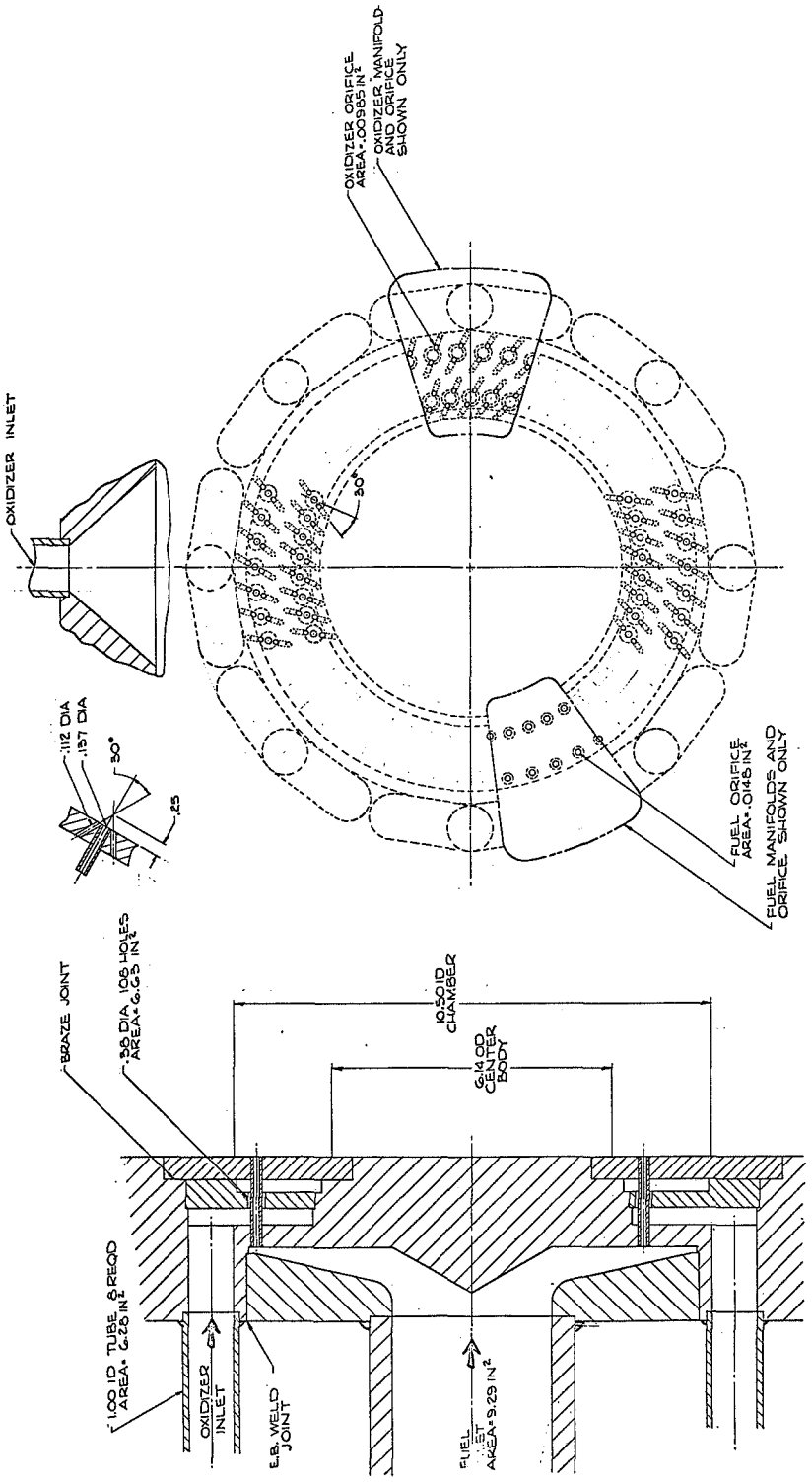

108-Element Triplet Injector for Annular Thrust Chamber Assembly

Figure 11

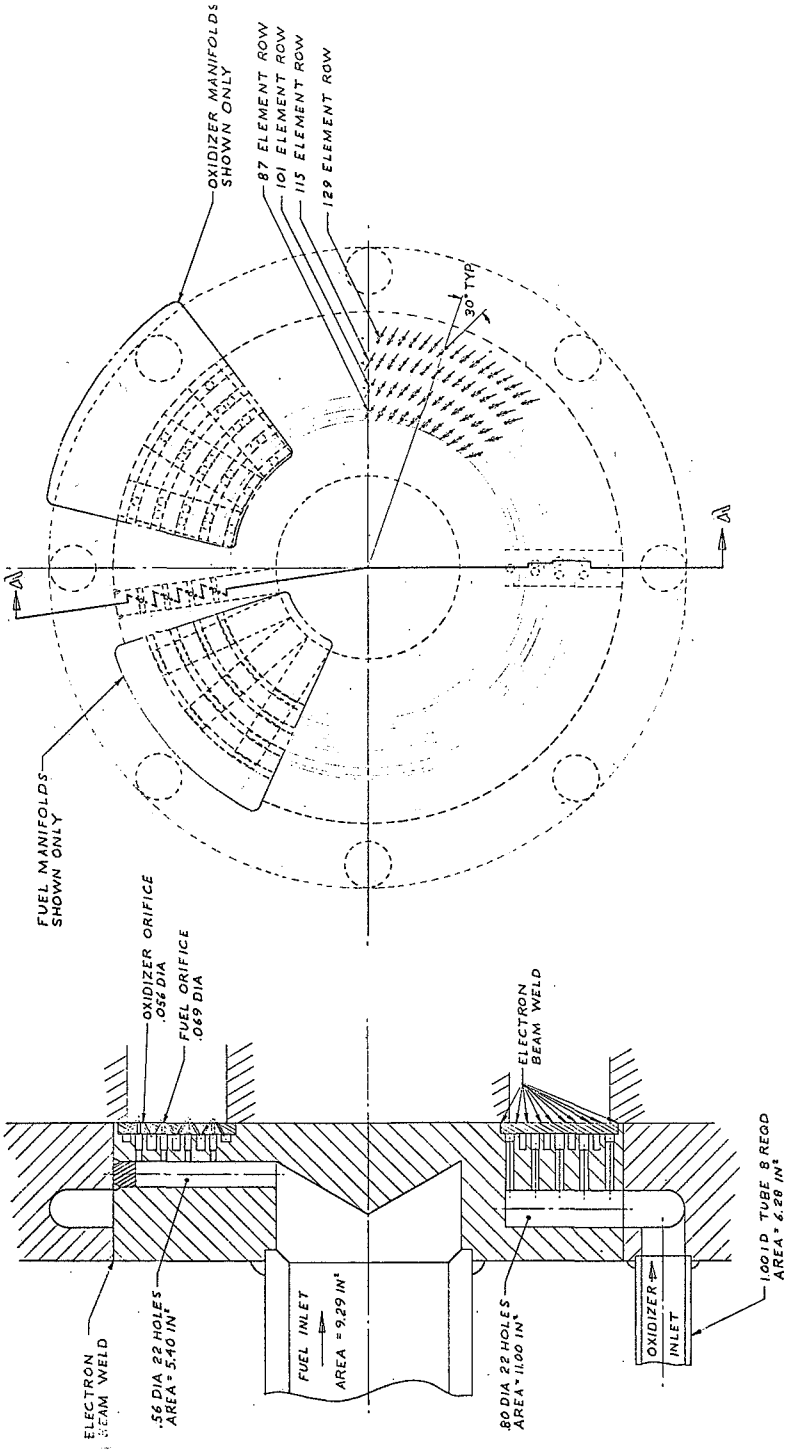

432-Element Triplet Injector for Annular Thrust Chamber Assembly

Figure 12

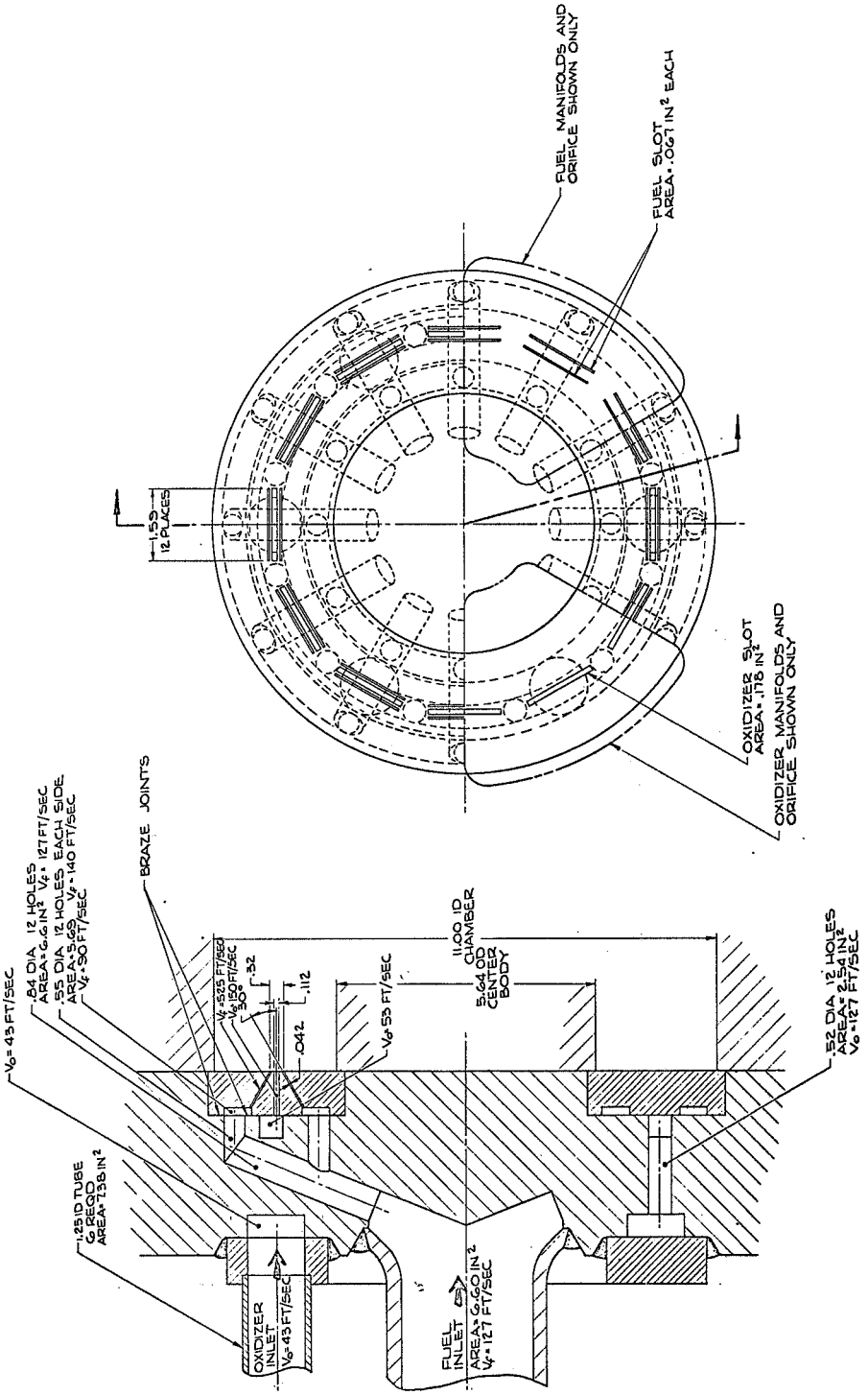

Concentric Sheet Injector for Annular Thrust Chamber Assembly

Figure 13

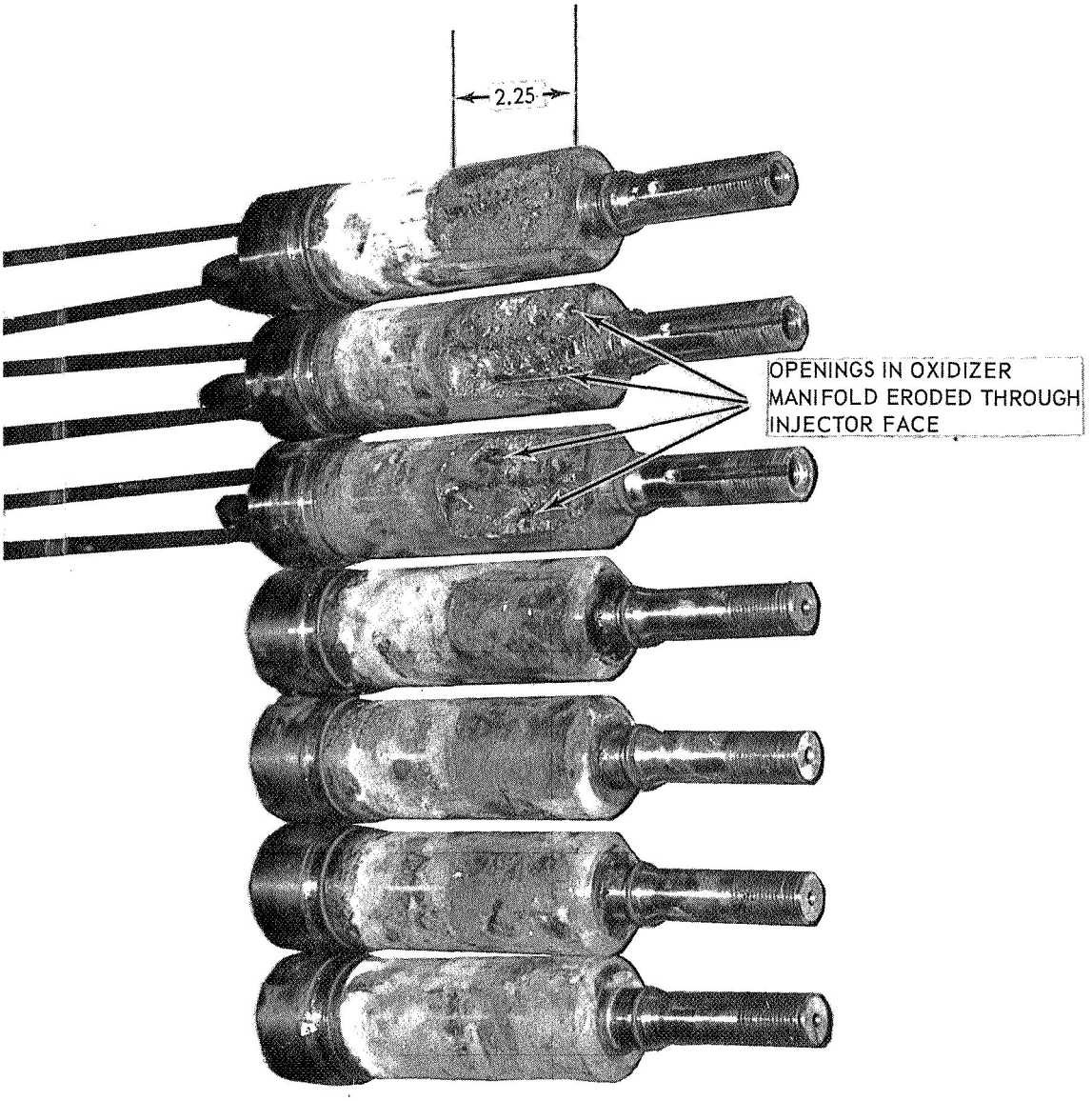

Damaged Injector Inserts from Test 002

Figure 14

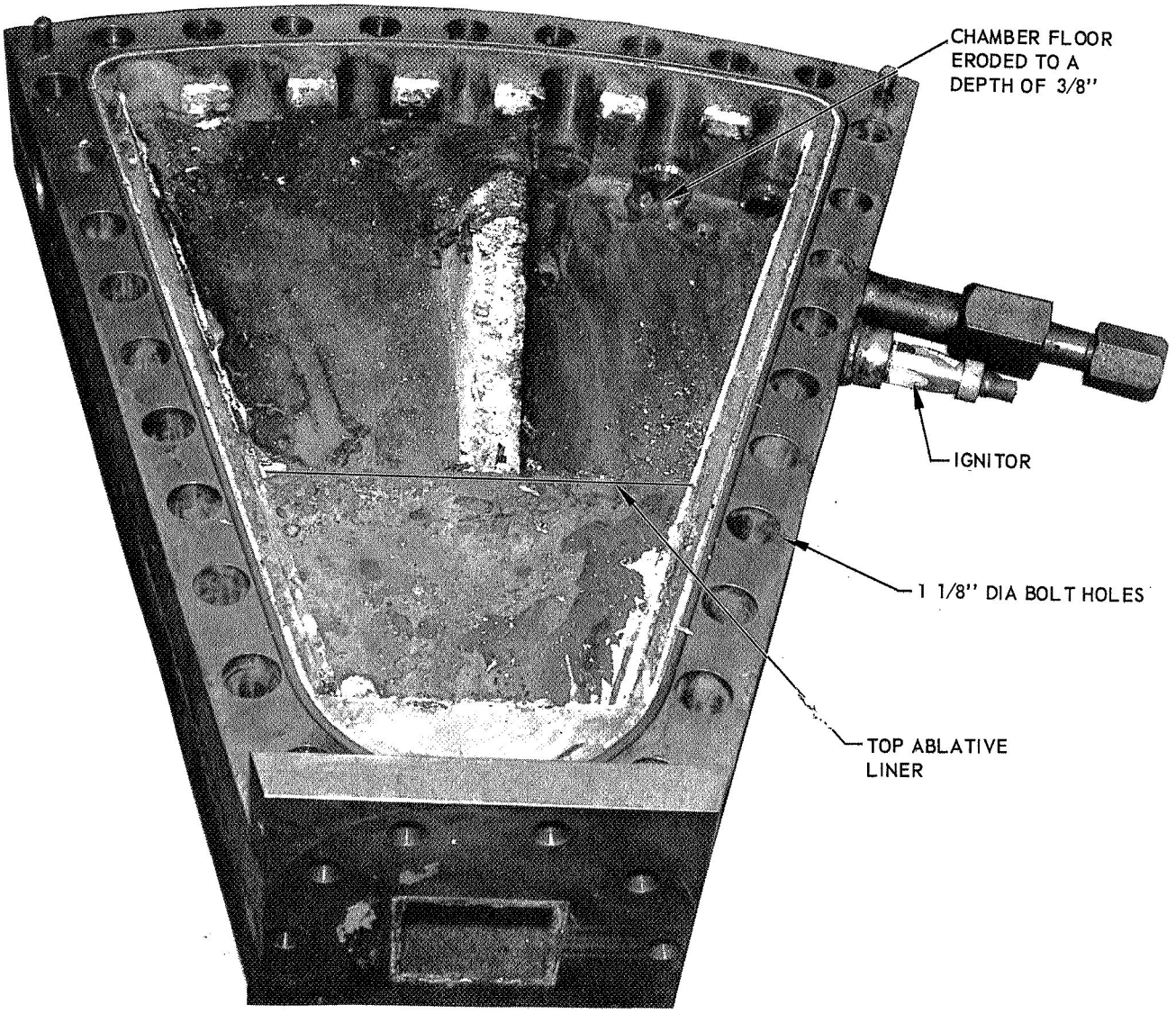

Damaged Excitation Chamber

Figure 15

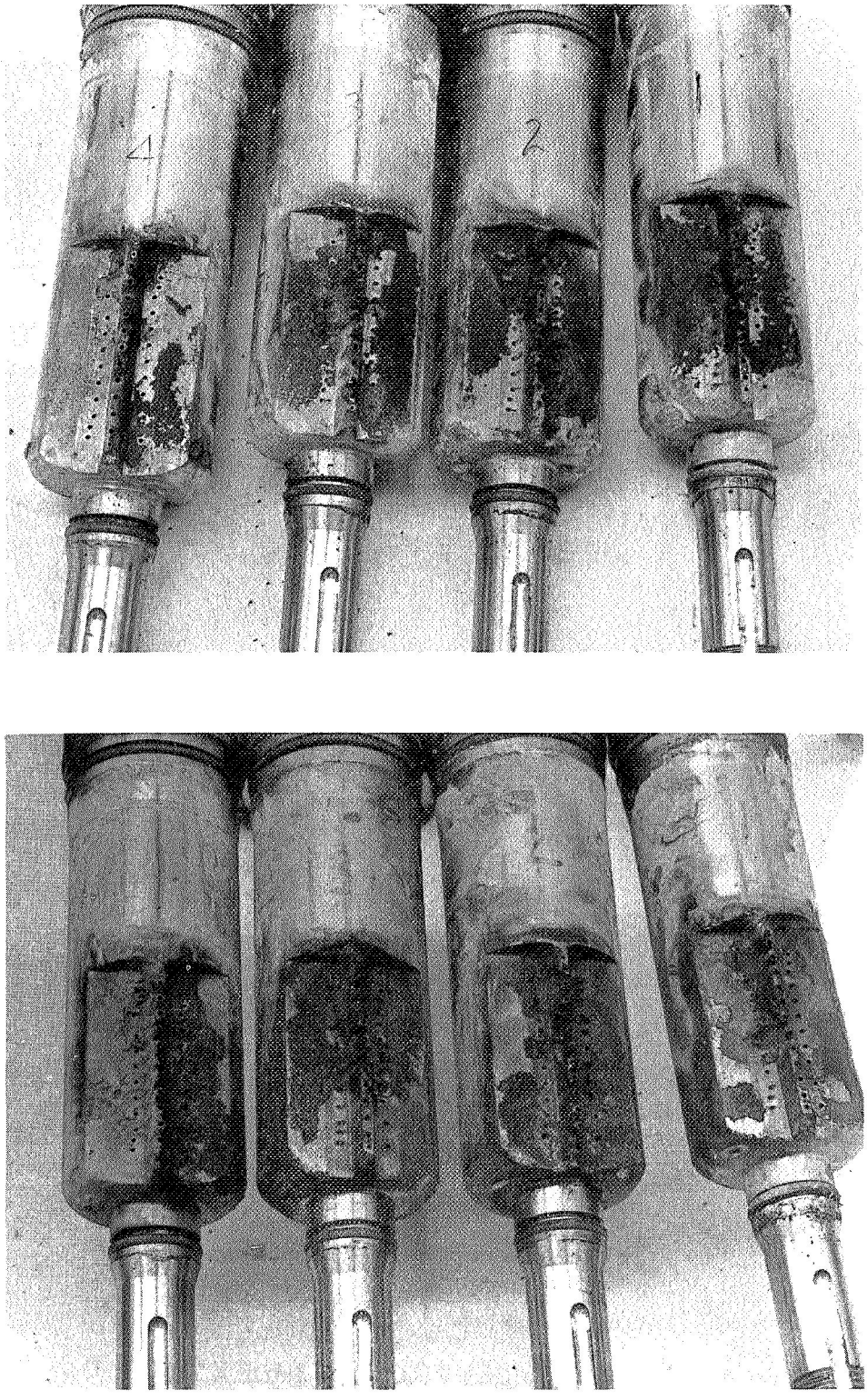

Damaged Injector Inserts from Tests 005 and 006

Figure 16

APPENDIX B

ANALYTICAL MODEL

TABLE OF CONTENTS

		Page
I.	Theory	1
	A. General Approach	1
	B. Governing Equations	2
	C. Combustion Response	12
	D. Nozzle Admittance Coefficients	29
	E. Characteristic Equation	43
	F. Discussion of Restrictions	61
II.	Program Listing	65
III.	References	124

FIGURE LIST

	Figure
The General Interaction Index for Two Types of Combustion Sensitivities	1
The Variation of the Feedback Factors R_η and I_η with Frequency	2
Sprays Produced by Various Orientations of the Injector Spud	3
Examples of Nonlinear Response Functions	4
Exhaust Nozzle Coordinate System	5
Nozzle Geometry and Comparison of Entrance Portions of Approximate and Actual Nozzle Geometries	6
Real Part of ξ Versus Axial Distance	
Real Part of $\xi^{(2)}$ Versus Axial Distance	8
Real Part of Pressure Admittance Coefficient Versus Axial Distance	9
Imaginary Part of Radial Velocity Admittance Coefficient Versus Axial Distance	10
Typical Solutions of (ω) and $\tau(\omega)$	11
Stable and Unstable Regions on the η, τ-Plane	12
Relationship of Various Transverse Modes on the η, τ-Plane	13
The Shift of the Stability Zone Due to Nonlinear and Velocity Effects	14
Applicable Frequency Ranges of Linear, Transverse Mode Sensitive Time Lag Model	15

LIST OF ABBREVIATIONS AND SYMBOLS

(Refer to Appendix B for Equations Listed)

A	Nozzle admittance coefficient defined by equation (35)
A_R, A_i	Real and imaginary part of A
$A_{\nu\eta}$	Injector non-uniformity coefficient for pressure effects
B	Nozzle admittance coefficient defined by equation (35)
B_r, B_i	Real and imaginary parts of B
$B_{\nu\eta}$	Injector non-uniformity coefficient for radial velocity effects
C	Nozzle admittance coefficient defined by equation (35)
C_r, C_i	Real and imaginary parts of C
$C_{\nu\eta}$	Injector non-uniformity coefficient for tangential velocity effects
c_e	Effective speed of sound
c_o^*	Speed of sound, ft/sec
d_f	Fuel orifice diameter, in.
d_i	Central orifice diameter of a coaxial injector element, in.
d_o	Oxidizer orifice diameter, in.
E	Transverse nozzle admittance coefficient
E_R, E_i	Real and imaginary parts of E
f*	Frequency, HERTZ (hz)
f	Describing function
h	Chamber damping effects
h_r, h_i	Real and imaginary parts of h
h_s	Total enthalpy, Btu/lb
I	Imaginary part of P
I	Sinusoidal input to nonlinear element

LIST OF ABBREVIATIONS AND SYMBOLS (cont.)

TF	Equivalent linear transfer function
TF_{um}	Limiting linear transfer function
t	Time, sec
t_1	Burning time, sec
υ	Axial dependency of the axial velocity perturbation
μ	Axial component of the velocity vector
μ_e	Mach number at the exit of the combustion chamber
VR	Velocity ratio of injected propellant fuel velocity to oxidizer velocity
V	Axial dependency of the radial perturbation
ν	Radial component of the velocity vector
ν_F	Fuel injection velocity, ft/sec
ν_x	Oxidizer injection velocity, ft/sec
w	Tangential component of the velocity vector
$\dot{w}_F$	Fuel flowrate, lb/sec
$\dot{w}_x$	Oxidizer flowrate, lb/sec
Y_x	Mass fraction concentration
z	Axial component of cylindrical coordinate system
z_e	Axial location of chamber exit, in.
Γ	Auxiliary function defined by equation (15)
γ	Ratio of the specific heats
δ_r	Radial displacement parameter defined by equation (21)
δ_θ	Tangential displacement parameter defined by equation (21)
ζ	Dummy variable of integration

LIST OF ABBREVIATIONS AND SYMBOLS (cont.)

θ	Angular component of cylindrical coordinate system
θ	Elapsed fractional portion of total time lag
θ_F	Fuel orifice impingement angle
θ_X	Oxidizer orifice impingement angle
λ	Real part of complex frequency
ρ	Density, $\frac{th}{ft^3}$
σ	Complex frequency ($\sigma=\lambda + i\omega$)
τ	Sensitive time lag
τ_T	Total time lag
ϕ	Velocity potential
ψ	Stream function
Ω	Auxiliary function defined by equation (15)
ω	Imaginary component of complex frequency
ω_C	Chamber frequency, hz
ω_N	Nozzle frequency, hz

SUBSCRIPT:
- e Chamber exit
- L Liquid
- $\rightarrow$ Vector

SUPERSCRIPTS:
- $\bar{}$ Steady state parameter
- * Complex conjugate
- * Dimensioned variable
- ' Perturbation value

LIST OF ABBREVIATIONS AND SYMBOLS (cont.)

k	Gas/liquid momentum interchange coefficient
L_c^*	Cylindrical chamber length, in.
ℓ_r	Radial velocity interaction index defined by equation (18)
ℓ_θ	Tangential velocity interaction index defined by equation (18)
M_c	Chamber Mach number
MR	Ratio of oxidizer flow rate to fuel flow rate
$\dot{M}_b$	Burning rate
$\dot{M}_i$	Injection rate lb/sec
M_r	radial displacement index defined in (21)
M_θ	Tangential displacement index defined in (21)
N	Generalized interaction index
N_L	Longitudinal mode number
N_η	Normalized counterpart of N
N_ω	Number of chamber frequencies to be used
η	Directional normal to streamline
η	Pressure interaction index defined by equation (18)
η_{min}	Minimum value of pressure interaction index
O	Nonlinear output of a nonlinear element
P	Pressure feedback parameter defined by equation (23)
P	Axial dependency of the pressure perturbation
p_c	Chamber pressure, psia
p_{cr}	Critical pressure, psia
p	Chamber pressure, psia

LIST OF ABBREVIATIONS AND SYMBOLS (cont.)

p_r	Ratio of chamber pressure to critical pressure of controlling propellant
Q	Burning rate per unit volume
$\vec{q}$	Velocity vector
R	Radial velocity feedback parameter defined by equation (23)
R_r	Same as R
R_δ	Displacement counterpart of R
R	Real part of P
R_η	Defined by equation (26)
r	Radial component of cylindrical coordinate system
r_c^*	Chamber radius, in.
S	Axial dependency of the entropy pertrubation
$s_{\nu\eta}$	Transverse acoustic mode number defined by equation (15)
$s_{\nu\eta}$	Same as $S_{\nu,\eta}$ defined by equation (69)
s	Streamline direction
T	Tangential velocity feedback parameter defined by equation (23)
T_ν	Same as T
T_δ	Displacement counterpart of T
T	Temperature, °R

I. THEORY

A. GENERAL APPROACH

The simplifying assumptions on which the mathematical treatment of combustion instability are based are the following:

(a) The substance contained in the combustion chamber is either in the form of liquid propellants, of practically zero volume, or in the form of complete combustion gases.

(b) The combustion gases are of constant composition; they obey the perfect gas law and have constant specific heats.

(c) Frictional effects on the walls are neglected, and only those are taken into account which result in the liquid droplet drag.

(d) The flow of injected propellants is unaffected by pressure oscillations in the chamber, and hence the injection flux and velocity are the same as steady conditions.

(e) The steady-state gas flow is uniform across any chamber section.

(f) In steady-state, the total energy (internal and kinetic) of the droplets remains constant.

(g) The steady-state flow in the nozzle is one-dimensional.

(h) The unsteady, oscillatory quantities in the chamber and in the nozzle can be obtained by superposing small perturbations to the steady-state quantities.

I, A, General Approach (cont.)

(i) The gas flow Mach number is always sufficiently small so that the cube can be neglected compared to unity.

(j) The time dependence of the perturbations can be expressed in complex form as exp (σt) where $\sigma = \lambda + i\omega$ is the same complex quantity for all perturbations. Here, ω is the angular frequency and λ the amplification coefficient.

B. GOVERNING EQUATIONS

1. General Equations

The equations governing the unsteady, two-phase flow in the combustion chamber are derived from the principles of conservation of mass, momentum, and energy, and the equation of state, according to the assumptions discussed in the previous section. It is convenient to work with the equations in nondimensional form. The reference quantities for the nondimensionalization are taken as the stagnation gas properties at the injector face (pressure, temperature, density, and speed of sound) together with a reference length, which is the chamber radius for transverse modes (the chamber length is generally used for longitudinal modes). The governing equations take the following forms:

Conservation of mass,

$$\frac{\partial \rho}{\partial t} + \nabla \cdot (\rho \vec{q}) = Q = -\frac{\partial \rho_L}{\partial t} - \nabla \cdot (\rho_L \vec{q}_L) \tag{1}$$

Conservation of momentum,

$$\rho \frac{\partial \vec{q}}{\partial t} + \rho \vec{q} \cdot \nabla \vec{q} + \frac{1}{\gamma} \nabla p = (Q + k\rho_L)(\vec{q}_L - \vec{q}) \tag{2}$$

I, B, Governing Equations (cont.)

Conservation of energy,

$$\rho \frac{\partial h_s}{\partial t} + \rho \vec{q} \cdot \nabla h_s - \frac{\gamma-1}{\gamma} \frac{\partial p}{\partial t} = Q\,(h_{Ls} - h_s) \tag{3}$$

Equation of state for the gas,

$$P = \rho T \tag{4}$$

Droplet drag (gas/liquid momentum interchange),

$$\frac{\partial \vec{q}_L}{\partial t} + \vec{q}_L \cdot \nabla \vec{q}_L = k\,(\vec{q} - \vec{q}_L) \tag{5}$$

and droplet energy,

$$\frac{\partial h_{Ls}}{\partial t} + \vec{q}_L \cdot \nabla_{Ls} = 0 \tag{6}$$

It is necessary to express the governing equations, (1) to (6), in steady-state form and perturbed form. The separation is accomplished by writing all the unsteady relationships as the sum of a steady-state solution and an unsteady solution. For example,

$$p = \bar{p} + p' e^{\sigma t}$$

$$u = \bar{u} + u' e^{\sigma t} \tag{7}$$

I, B, Governing Equations (cont.)

It is noted that the perturbed portion of each parameter is harmonic with respect to time.

2. Steady-State Equations

The steady-state solution is assumed to be one dimensional although the perturbations are considered in three dimensions. Therefore, the steady-state vectorial components of gas velocity, q, and liquid velocity, q_L, are given by the following relationships:

$$\bar{\vec{q}} = \bar{u}, \quad \bar{\vec{q}}_L = \bar{u}_L$$
$$\bar{v} = \bar{w} = \bar{v}_L = \bar{w}_L = 0 \tag{8}$$

where u, u_L are the axial components, v, v_L are the radial components, and w, w_L are the tangential components of q, q_L. Substituting the relationships given by (7) and (8) into (1) to (6) and neglecting the time dependence, yields the following system of steady-state equations:

Conservation of mass,

$$\frac{d}{dz}(\bar{\rho}\bar{u}) = \bar{Q} = -\frac{d}{dz}(\bar{\rho}_L\bar{u}_L) \tag{9a}$$

Conservation of momentum,

$$\frac{d}{dZ}(\bar{\rho}\bar{u}^2) + \frac{d}{dZ}(\bar{\rho}_L\bar{u}_L^2) = -\frac{1}{\gamma}\frac{d\bar{p}}{dZ} \tag{9b}$$

I, B, Governing Equations (cont.)

Conservation of energy,

$$\bar{\rho}\bar{u}\frac{dh_s}{dZ} = -\bar{Q}\ (h_s - \bar{h}_{Ls}) \tag{9c}$$

Equation of state (gas),

$$\bar{p} = \bar{\rho}\bar{T} \tag{9d}$$

Droplet drag,

$$\bar{u}_L\frac{d\bar{u}_L}{dZ} = k\ (\bar{u} - \bar{u}_L) \tag{9e}$$

Droplet energy,

$$\frac{dh_{Ls}}{dZ} = 0 \tag{9f}$$

These equations are easily integrated to give the following relations:

$$\bar{\rho}\bar{u} = \int_o^Z \bar{Q}\ (\zeta)\ d\zeta = \bar{\rho}_{LO}\bar{u}_{LO} - \bar{\rho}_L\bar{u}_L \tag{10a}$$

$$\bar{p} = \bar{\rho} = \frac{1 - \gamma\ (\bar{\rho}_L\bar{u}_L^2 - \bar{\rho}_{LO}\bar{u}_{LO}^2)}{(1 + \gamma\ \bar{u}^2)} \tag{10b}$$

$$\bar{h}_{Ls} = \bar{h}_{LsO} = \bar{h}_{sO} = \bar{h}_s \tag{10c}$$

I, B, Governing Equations (cont.)

$$(\bar{u}_L)_{j+1} = (\bar{u}_L)_j + k\left[\frac{\bar{u}-\bar{u}_L}{\bar{u}_L}\right]_j \Delta Z \qquad (10d)$$

$$j = 0, 1, 2, \ldots$$

$$\bar{Q}(Z) = \frac{\bar{\rho}(1-\gamma\bar{u}^2)\frac{d\bar{u}}{dZ} - \gamma k\rho_L(\bar{u}-\bar{u}_L)\bar{u}}{1+\gamma(\bar{u}-u_L)\bar{u}} \qquad (10e)$$

$$\bar{\rho}_L = \frac{\bar{\rho}_{LO}\bar{u}_{LO} - \bar{\rho}\bar{u}}{\bar{u}_L} \qquad (10f)$$

It should be noted that, at $Z = 0$, $\bar{u} = 0$ and $\bar{p} = \bar{\rho} = 1$ because of the nondimensionalizing scheme. At $Z = Z_E$, combustion is assumed to be complete so that $\bar{\rho}_L = 0$ and $\bar{Q} = 0$. The droplet drag equation is most conveniently integrated numerically for $\bar{u}_L$ (Equation (10d)).

3. The Perturbation Equations: Wave Equations

The perturbed equations are considered in three dimensional form and the resulting system of equations is linearized. That is, the perturbed quantities are considered to be small and, therefore, all products of two or more perturbed terms are considered to be zero. Substituting Equations (7) and (8) into Equations (1) to (6) yields the following system of equations:

$$(\sigma + \frac{d\bar{u}}{dZ})\rho' + u\frac{\partial\rho'}{\partial Z} + \frac{d\bar{\rho}}{dZ}u' + \rho\left(\frac{\partial v'}{\partial r} + \frac{v'}{r}\right.$$

$$\left. + \frac{1}{r}\frac{\partial w'}{\partial\theta} + \frac{\partial u'}{\partial Z}\right) = \bar{Q}(Pp' + Rv' + Tw') \qquad (11a)$$

I, B, Governing Equations (cont.)

where $P = n(1-e^{-i\omega\tau})$,

$$R = \ell_r(1-e^{-i\omega\tau}) = \frac{1_r}{n} P, \text{ and}$$

$$T = 1_\theta(i-e^{i\omega\tau}) = \frac{1_\theta}{n} P$$

Conservation of axial momentum,

$$(\sigma\bar{u} + 2\bar{u}\frac{d\bar{u}}{dZ})\rho' + (\sigma\bar{u}_L + 2\bar{u}_L\frac{d\bar{u}_L}{dZ})\rho_L' + \bar{u}^2\frac{\partial p'}{\partial Z} + \bar{u}_L{}^2\frac{\partial \rho_L'}{\partial Z}$$

$$+ (\sigma\bar{\rho} + 2\bar{\rho}\frac{d\bar{u}}{dZ} + 2\bar{u}\frac{\partial\bar{\rho}}{dZ})u' + (\sigma\bar{\rho}_L + 2\rho_L\frac{du_L}{dZ} + 2\bar{u}_L\frac{d\bar{\rho}_L}{dZ})u_L'$$

$$+ 2\bar{\rho}\bar{u}\frac{\partial u'}{\partial Z} + 2\bar{\rho}_L\bar{u}_L\frac{\partial u_L'}{\partial Z} + \bar{\rho}\bar{u}(\frac{\partial v'}{\partial r} + \frac{v'}{r} + \frac{1}{r}\frac{\partial w'}{\partial\theta})$$

$$+ \bar{\rho}_L\bar{u}_L(\frac{\partial v_L'}{\partial r} + \frac{v_L'}{r} + \frac{1}{r}\frac{\partial w_L'}{\partial\theta}) = -\frac{1}{\gamma}\frac{\partial p'}{\partial Z} \qquad (11b)$$

Conservation of radial momentum,

$$(\sigma\bar{\rho} + \bar{\rho}\frac{d\bar{u}}{dZ} + \bar{u}\frac{d\bar{\rho}}{dZ})v' + (\sigma\bar{\rho}_L + \bar{\rho}_L\frac{d\bar{u}}{dZ} + \bar{u}_L\frac{d\bar{\rho}_L}{dZ})v_L'$$

$$+ \bar{\rho}\bar{u}\frac{\partial v'}{\partial Z} + \bar{\rho}_L\bar{u}_L\frac{\partial v_L'}{\partial Z} = -\frac{1}{\gamma}\frac{\partial p'}{\partial r} \qquad (11c)$$

I, B, Governing Equations (cont.)

Conservation of tangential momentum,

$$(\sigma\bar{\rho} + \bar{\rho}\frac{d\bar{u}}{dZ} + \bar{u}\frac{d\bar{\rho}}{dZ})w' + (\sigma\bar{\rho}_L + \bar{\rho}_L\frac{d\bar{u}_L}{dZ} + \bar{u}_L\frac{d\bar{\rho}_L}{dZ})w_L'$$

$$+ \bar{\rho}\bar{u}\frac{\partial w'}{\partial Z} + \bar{\rho}_L\bar{u}_L\frac{\partial w_L'}{\partial Z} = -\frac{1}{\gamma r}\frac{\partial p'}{\partial \theta} \qquad (11d)$$

Conservation of energy and equation of state, combined,

$$(\sigma\bar{\rho} + \bar{Q} - u\frac{d\bar{\rho}}{dZ})\rho' + \bar{\rho}\bar{u}\frac{\partial \rho'}{\partial Z} - (\gamma-1)\,\bar{\rho}\bar{u}\,(\sigma\bar{\rho} + \bar{Q} + \bar{}\frac{d\bar{u}}{dZ})u'$$

$$- (\gamma-1)(\bar{\rho}\bar{u}^2\frac{\partial u'}{\partial Z}) = (\sigma\frac{\bar{\rho}}{\gamma} + \bar{Q} - \bar{u}\frac{d\bar{\rho}}{dZ})p' + \bar{\rho}\bar{u}\frac{\partial p'}{\partial Z} \qquad (11e)$$

Droplet dynamics,

Defining $K = \frac{k}{k+\sigma}$

And $\xi = (k+\sigma)\frac{dZ}{\bar{u}_L}$

Then

$$u_L' = Ku' - \frac{K}{\bar{u}_L}e^{-\xi}\left\{\int_o^Z \frac{d\bar{u}_L}{dZ}e^{\xi}\,u'dZ + \int_o^Z \bar{u}_L\,e^{\xi}\frac{\partial u'}{\partial Z}\,dZ\right\} \qquad (11f)$$

$$v_L' = K(1-e^{-\xi})v' - Ke^{-\xi}\int_o^Z e^{\xi}\frac{\partial v'}{\partial Z}\,dZ \qquad (11g)$$

$$w_L = K(1-e^{-\xi})w' - Ke^{-\xi}\int_o^Z e^{\xi}\frac{\partial w'}{\partial Z}\,dZ \qquad (11h)$$

I, B, Governing Equations (cont.)

$$(\sigma + \frac{d\bar{u}}{dZ})\rho' + (\alpha + \frac{d\bar{u}_L}{dZ})\rho_L' + \bar{u}\frac{\partial\rho'}{\partial Z} + \bar{u}_L\frac{\partial\rho_L'}{\partial Z}$$

$$+ \bar{\rho}(\frac{\partial v'}{\partial r} + \frac{v'}{r} + \frac{1}{r}\frac{\partial w'}{\partial\theta} + \frac{\partial u'}{\partial Z}) + \bar{\rho}_L(\frac{\partial v_L'}{\partial r} + \frac{v_L'}{r}$$

$$+ \frac{1}{r}\frac{\partial w_L'}{\partial\theta} + \frac{\partial v_L'}{\partial Z}) + \frac{d\bar{\rho}}{dZ}u' + \frac{d\bar{\rho}_L}{dZ}u_L' = 0 \qquad (11i)$$

In general, separation of variables is not possible with these equations. A solution can be obtained by writing each quantity in a series such that each successive term in the series is less than its predecessor. Therefore, the pressure perturbation is written in the form

$$p' = p_o + p_1 + p_2 + p_3 + \ldots p_n + \ldots \qquad (12)$$

where p_o can assume any magnitude within the restrictions of the analysis. Then $p_1 = 0\ (u_e \cdot p_o)$*, $p_2 = 0\ (\bar{u}_e^2 \cdot p_o)$ and $p_n = 0\ (\bar{u}_e^n \cdot p_o)$ where $\bar{u}_e$ is the chamber Mach number. Applying this approach to Equations (11a) through (11b), collecting terms of like order, and solving for the pressure results in wave equations for p_o, p_1, and p_2:

$$\sigma^2 p_o - {}^2 p_o = 0 \qquad (13a)$$

$$\sigma^2 p_1 \quad {}^2 p_1 = \sigma\gamma\bar{Q}\,(P_1 p_o - R_1\frac{1}{\sigma\gamma\bar{\rho}}\frac{\partial p_o}{\partial r}$$

$$- T_1\frac{1}{\sigma\gamma\bar{\rho}r}\frac{\partial p_o}{\partial\theta}) - \sigma\ 2\frac{d\bar{u}}{dZ} + (\gamma-1)\frac{\bar{Q}}{\bar{\rho}} + \frac{k}{k+\sigma}\frac{\bar{\rho}_L}{\bar{\rho}}\ p_o \qquad (13b)$$

*This notation is used to indicate the order of magnitude of a given parameter.

I, B, Governing Equations (cont.)

$$\sigma^2 p_2 - \nabla^2 p_2 = \lambda_1 P_2 + \lambda_2 R_2 + \lambda_3 T_2 + \lambda_4 \tag{13c}$$

where $$\nabla^2 = \frac{\partial^2}{\partial r^2} + \frac{\partial}{\partial r} + \frac{1}{r}\frac{\partial^2}{\partial \theta^2} + \frac{\partial^2}{\partial Z^2}$$

and λ_1, λ_2, λ_3, and λ_4 are complicated functions of the lower-order solutions, p_o and p_1. P_1, R_1, and T_1 are the first-order approximations to the burning rate functions defined in Equation (11a); and P_2, R_2, and T_2 are the corrected values resulting from the second-order solutions.

The solutions of (13a) to (13c) are given by

$$p_o\,(Z,r,\theta) = P_{oo} \cos h\, \Omega(Z) \psi\,(r)\, \theta\,(\theta) \tag{15a}$$

$$P_o\,(Z,r,\theta) = P_{oo}\,(\Gamma_{11} P_1 + \Gamma_{10})\, \psi\,(r)\, \theta\,(\theta) \tag{15b}$$

$$p_o\,(Z,r,\theta) = P_{oo}\,(\Gamma_{21} P_2 + \Gamma_{20})\, \psi\,(r)\, \theta\,(\theta) \tag{15c}$$

where $\psi\,(r) = J_\nu\,(s_{\nu\eta} \cdot r)$

$$\theta(\theta) \quad \begin{cases} \cos \nu\theta & \text{STANDING MODE} \\ e^{-\nu\theta} & \text{SPINNING MODE} \end{cases} \tag{15d}$$

and J_ν represents the Bessel function for the first kind of order ν

$$\Gamma_{11} = \frac{1}{\Omega}\left(-\sigma\gamma A_{\nu\eta} + \frac{\ell_r}{n} B_{\nu\eta} + \frac{\ell_\theta}{n} C_{\nu\eta}\right) \int_o^Z \bar{Q}(\zeta) \sin h\, [\Omega(Z-\zeta)]\, d\,\zeta \tag{15e}$$

where $\Omega^2 = \sigma^2 + s_{\nu\eta}^2$

I, B, Governing Equations (cont.)

$$\Gamma_{10} = \frac{\sigma}{\Omega} \quad (\gamma-1) \int_o^Z \bar{Q}(\zeta) \sin h\, [\Omega(Z-\zeta)]\, d\zeta$$

$$+ 2 \int_o^Z \frac{d\bar{u}}{dZ}(\zeta) \sin h\, [\Omega(Z-\zeta)]\, d\zeta$$

$$+ \frac{k\sigma}{k+\sigma} \int_o^Z \frac{\bar{\rho}_L}{\bar{\rho}}(\zeta) \sin h\, [\Omega(Z-\zeta)]\, d\zeta \qquad (15f)$$

$$\Gamma_{21} = \frac{1}{\Omega} \quad A_{\nu\eta} \int_o^Z \lambda_1(\zeta) \sin h\, [\Omega(Z-\zeta)]\, d\zeta$$

$$+ \left(\frac{\ell_r}{n} B_{\nu\eta} + \frac{\ell_\theta}{n} C_{\nu\eta}\right) \int_o^Z \lambda_2(\zeta) \sin h\, [\Omega(Z-\zeta)]\, d\zeta \qquad (15g)$$

$$\Gamma_{20} = \frac{1}{\Omega} \int_o^Z \lambda_4(\zeta) \sin h\, [\Omega(Z-\zeta)]\, d\zeta \qquad (15h)$$

These solutions depend on the following boundary conditions:

$Z = 0, \quad u' = 0$

$r = 1, \quad v' = 0$

$r = 0, \quad v' < \infty$

To complete the analysis, the combustion terms must be considered in detail and the boundary condition at the nozzle entrance (viz., the nozzle admittance condition) must be specified.

I, Theory (cont.)

C. COMBUSTION RESPONSE

1. General Formulation

It is necessary now to provide a mathematical formulation for the combustion terms in the flow equations in terms of the chamber conditions. Our quantitative understanding of the actual combustion processes is not sufficient to provide a mathematical model. Fortunately, the heuristic formulation based on the sensitive time lag concept seems to provide a good representation of the actual combustion response. The relation between time lag and burning rate is immediately found by considering that the fraction of propellant burning at a certain station in a time interval dt must have been injected during the interval $d(t-\tau_t)$. If, then, $\dot{M}_b$ and $\dot{M}_i$ are the corresponding burning and injection rates, we must have

$$\dot{M}_b dt = \dot{M}_i d(t-\tau_t)$$

In steady-state τ_t does not vary with time, and hence, if the injection rate is unaffected by the oscillations

$$\bar{\dot{M}}_b = \bar{\dot{M}}_i$$

From these two relations we obtain the fractional perturbation of the burning rate in the form

$$\frac{\dot{M}_b}{\bar{\dot{M}}_b} = \frac{\dot{M}_b - \bar{\dot{M}}_b}{\bar{\dot{M}}_b} = -\frac{\partial \tau_t}{\partial t} = \frac{-d\tau}{dt} \qquad (16)$$

where, in accordance with the definition of sensitive time lag, the variation of τ with time is entirely due to the variation of τ_t, and where τ has been assumed to be the same for all propellant elements, and hence independent of the space coordinates.

I, C, Combustion Response (cont.)

Turning to the evaluation of $d\tau/dt$, a satisfactory mathematical description is obtained if one imagines that during the sensitive time lag certain preparatory processes, which need not be more precisely defined, take place at a rate depending on the local, instantaneous values of quantities representing the state and the motion of the gas and droplets. When these preparatory processes, integrated over the duration of the sensitive time lag, reach a certain fixed level, the conversion into hot gases takes place abruptly. It is clear, then, that when the state and the motion conditions vary, also the duration of the sensitive (and hence, the total) time lag will vary, resulting in a variable rate of gas production.

The quantitative formulation follows at once. If the rate of the preparatory processes is given by a function f (p, T, ν, ...) of the pertinent values of the pressure, temperature, any representative velocity (for instance the radial gas velocity) and possibly other quantities representing the conditions in the chamber, the sensitive time lag τ for an element burning at the time t will be given by the equation

$$\int_{t-\tau}^{t} f(p, T, \nu, \ldots .)\, dt, = \text{Const.}$$

where t_1 represents the burning time. Here the values of p, T, ν, ... must be evaluated not only at time t_1, but also at the position where the particular propellant element finds itself at that time. Since the above relation must be satisfied also in steady operation, indicating the steady-state quantities with a superimposed bar we must have

$$\int_{t-\tau}^{t} f(p, T, \nu, \ldots .)\, dt, = \int_{t-\bar{\tau}}^{t} f(\bar{p}, \bar{T}, \bar{\nu}, \ldots .)\, dt_1 \qquad (17)$$

I, C, Combustion Response (cont.)

Now we introduce the perturbations, such that

$$p = \bar{p} + p'; \; T = \bar{T} + T'; \; \nu = \bar{\nu} + \nu'; \; \ldots .$$

and expand the rate function in a Taylor series

$$f(p, T, \nu, \ldots .) = \bar{f} + \bar{f}_p \, p' + \bar{f}_T T' + \bar{f}_\nu \, \nu' + \ldots .$$

where $\bar{f} = f(\bar{p}, \bar{T}, \bar{\nu}, \ldots .)$ and similarly for the partial derivatives f_p, f_T, f_ν of f with respect to the subscripts. Observe that, under the small perturbations assumption, the Taylor series must be stopped after the first order terms.

If it is assumed that the temperature is a function only of the pressure (for instance, through the isentropic defining relation) $T' = p'(dT/dp)$. Then, defining the nondimensional interaction indices $\eta, \ell, \ldots .$ as

$$\eta = \frac{\bar{p}}{\bar{f}} \bar{f}_p + \bar{f}_T (dT/dp), \quad \ell = \frac{\bar{f}_\nu}{\bar{f}}, \ldots . \tag{18}$$

$$f(p, T, \nu, \ldots .) \; \bar{f} \left(1 + \eta \frac{p'}{\bar{p}} + \ell, \nu' + \ldots .\right)$$

and Equation (17) can be written in the form

$$\int_{t-\tau}^{t-\bar{\tau}} \bar{f}\left(1 + \eta \frac{p'}{\bar{p}} + \ell\nu' + \ldots .\right) dt_1, + \int_{t-\tau}^{t} \bar{f}\left(1 + \eta \frac{p'}{\bar{p}} + \ell\nu' + \ldots .\right) dt_1$$

$$= \int_{t-\tau}^{t} \bar{f} \, dt_1$$

I, C, Combustion Response (cont.)

Here the integration interval at the L.H.S. of Equation (17) has been split in two parts. The first interval, from $t - \tau$ to $t - \bar{\tau}$ is of duration $\tau - \bar{\tau}$ and hence of the order of the perturbation of the time lag. Hence, compared with the other two integrals, the first integral is of the order of a perturbation. As a result in its evaluation one can disregard in the integrand the terms containing the perturbations which, in view of the small perturbation assumption, would result in a negligible second order contribution. Then, simplifying, the above equation becomes

$$\int_{t-\tau}^{t} \bar{f}\, dt_1 = \int_{t-\bar{\tau}}^{t} \bar{f}\left(\eta \frac{p'}{\bar{p}} + \ell\nu' + \ldots .\right) dt_1$$

In the combustion $\bar{p}$ is approximately constant, and if ν is the radial gas velocity, so that $\bar{\nu} = 0$ then $\bar{f}\ (\bar{p}, \bar{\nu})$ is a constant, and so are η and ℓ.

Then we obtain simply

$$\bar{\tau} - \tau = \eta \int_{t-\bar{\tau}}^{t} \frac{p'}{\bar{p}}\, dt_1 + \ell \int_{t-\bar{\tau}}^{t} \nu' dt_1 + \ldots .$$

or, differentiating with respect to t

$$-\frac{d\tau}{dt} = \eta\left[\frac{p'}{\bar{p}}(t) - \frac{p'}{\bar{p}}(t-\bar{\tau})\right] + \ell\left[\nu'(t) - \nu'(t-\bar{\tau})\right] + \ldots . \qquad (19)$$

Again, it must be specified that while $p'(t)$ is evaluated at the conversion instant t at the location where the conversion takes place, $p'(t - \bar{\tau})$ must be evaluated not only at time $t - \bar{\tau}$, but also at the location where the propellant was at that time. However, the displacement of the propellant during the time τ produces an effect of second order in the expression (19). As a reasonable approximation, therefore, both $p'(t)$ and $p'(t - \bar{\tau})$ can be evaluated at the station when the conversion into burned gases takes place. And, of course, the same applies to the velocity effect of Equation (19), and to other possible effects.

I, C, Combustion Response (cont.)

In Equation (19) only the pressure sensitivity and the radial velocity sensitivity are explicitly considered. Concerning the last it must be added that other components of the gas velocity can be treated in exactly the same fashion. If one is interested, for instance, in the effect of the transversel nonuniformity of the gas composition, then also the tangential velocity component is revelant, and correspondingly another velocity sensitive term must appear in Equation (19), which becomes, in the absence of other interactions

$$-\frac{d\tau}{dt} = n\,[p'(t)-p'(t-\bar{\tau})] + \ell_r\,[v'(t)-v'(t-\bar{\tau})] + \ell_\theta\,[w'(t)-w'(t-\bar{\tau})] \qquad (20)$$

It must be observed that, actually, when only the effects of the nonuniform gas composition on the burning rate are sought, what counts is the displacement of the gases with respect to the droplets, rather than the relative velocity. This can be formalized by writing, for instance, instead of (20),

$$-\frac{d\tau}{dt} = n\left[\frac{p'}{\bar{p}}(t) - \frac{p'}{\bar{p}}(t-\bar{\tau})\right] + M_r\left[\delta_r'(t)-\delta_r'(t-\bar{\tau})\right] + M_\theta\left[\delta_\theta'(t)-\delta_\theta'(t-\bar{\tau})\right] \qquad (21)$$

where M_r and M_θ are two displacement indices relative to the radial and tangential displacements δ_r, δ_θ respectively. The two formulations (20) and (21) are closely correlated, because of the relations existing between velocities and displacements.

If the time dependence of the perturbations in Equations (20) and (21) is taken to be exp (st), the result is

$$-\frac{d\tau}{dt} = -(Pp' + R_v v' + T_v w') - (Pp' + R_\delta\ \delta_r' + T_\delta\ \delta_\theta') \qquad (22)$$

I, C, Combustion Response (cont.)

where the quantities defined by

$$\frac{P}{n} = \frac{P_\nu}{\ell_r} = \frac{T_\nu}{\ell_\theta} = \frac{R_\delta}{M_r} = \frac{T_\delta}{M_\theta} = 1-e^{-\sigma\bar{\tau}}, \quad (\sigma = \lambda+iw) \tag{23}$$

are, in view of (16), to be interpreted as feedback factors. In this case the relation between velocities and displacements is simply $\nu' = \sigma\delta' r$, $w' = \sigma\delta'_\theta$ so that

$$R_\delta = \sigma R_\nu, \; T_\delta = \sigma T_\nu$$

2. Relevance of the Time Lag Formulation

The implications of these equations are immediately seen, by discussing for instance the pressure feedback factor P. From (23) it can be seen that P = R + iI is a complex quantity, having a component R in phase with the pressure oscillations and one I in quadrature. The component in Phase is actually only one responsible for the magnitude of the energy feedback. For neutral oscillations (λ=0), its magnitude is immediately found to be $\eta(1-\text{Cos}\omega\,\bar{\tau})$. Thus, for given η and for ω determined by one of the proper frequencies of the chamber, the energy feedback is zero if $\omega\bar{\tau}$ is a multiple of 2π, and has its maximum value when $\omega\bar{\tau}$ is π, 3π, 5π, ... When $\bar{\tau}$ is around the latter values, instability is most likely to appear. Hence, if $\bar{\tau}$ has an assigned value (characteristic of the combustion system considered) there would be according to the present formulation, not one but a series of preferred frequency ranges. This conclusion does not agree with the experimental observations, and would seem to cast a doubt on the validity of the heuristic combustion model derived from the sensitive time lag concept.

However, a closer examination shows where the reason of the disagreement resides. In Equation (17) the rate function f(p, T, ν, ...) has been assumed to depend on the chamber conditions, but not on the progress of the preparatory process themselves, and hence on the time elapsed since the

I, C, Combustion Response (cont.)

entrance of the propellant in the sensitive portion of the time lag. In other words, the effect of given perturbations of the chamber conditions on the value of the integral at the L.H.S. of Equation (17) is the same no matter where during the sensitive time lag, the perturbations take place. This is, indeed, in line with the step function assumption concerning the sensitivity, which has been assumed to be zero during the insensitive portion, and at a constant level during the sensitive portion of the total time lag τ_t.

In a more realistic model, the step function sensitivity should be replaced by an appropriate smooth distribution of some kind during the whole τ_t, with a maximum toward its end. Without entering into the details of the analysis (which can be found in Ref. 8), the equation replacing Equation (19) for the case of pure pressure sensitivity can be given as

$$-\frac{\partial \tau_t}{\partial t} = \bar{\tau}_t \int_0^1 \frac{N(\theta)}{\bar{p}} \frac{\partial}{\partial t} [p\ (t - \bar{\tau}_t \theta)]\ d\theta \qquad (24)$$

where θ represents the fraction of the total time lag already elapsed (starting from the injection instant), and $N(\theta)$ is a generalized interaction index, which is now a general function of the instant considered during the time lag. It can easily be checked that for $N(\theta) = \text{const}\ \eta$ Equation (19) will be obtained.

If the exponential time dependence of p (with $\lambda = 0$) is introduced, the feedback factor is

$$p = R + iI = \frac{\dot{M}_b}{\bar{\dot{M}}_b} \Big/ \frac{p'}{\bar{p}} = i w \bar{\tau}_t \int_0^1 N(\theta) e^{i w \bar{\tau}_t \theta}\ d\theta \qquad (25)$$

I, C, Combustion Response (cont.)

the real part of which, responsible for the energy feedback, reduces to $\eta(1 - \text{Cos } w\bar{\tau})$ if N is assumed to take the values zero for $0 \leq \bar{\tau}_t\ \theta \leq \bar{\tau}_t - \bar{\tau}$ and η for $\bar{\tau}_t - \bar{\tau} \leq \bar{\tau}_t\ \theta \leq \bar{\tau}_t$, in accordance to the step function assumption about the sensitivity. This is indeed the expression which leads to the incorrect prediction of more than one preferred frequency range for a given τ.

If, however, N is given a smooth variation this erroneous prediction disappears. Take, for instance, $N(\theta) \sim (1 - \text{Cos } 2\pi\theta) \exp(-a\theta)$. This sensitivity distribution vanishes at the two ends of the total time lag, and, for sufficiently large values of α, is strongly skewed towards its end, as Figure 1, corresponding to $\alpha = 30$ shows. Here we have plotted the "normalized" sensitivity $N_\eta = N/(N)$, where $(N) = \int_0^1 N d\theta$ has been plotted. Defining also $R\eta = R/(N)$ and $I_\eta = I/(N)$ the real part of the feedback factor, for large a is given by

$$R_\eta = 2\pi \frac{\alpha\beta^2 (\alpha^2 + 1)(3\alpha^2 + 1 - \beta^2)}{(\alpha^2 + \beta^2)[(\alpha^2 + 1 - \beta^2)^2 + 4\alpha^2\beta^2]} \qquad (26)$$

where $\alpha = a/2\pi$ and $\beta = \omega\bar{\tau}_t/2\pi$. It is clear that, contrary to the value of R corresponding to the step-function distribution of N, this value of $R\eta$ is positive only for $\omega\bar{\tau}$ smaller than a well defined value, above which it becomes and stays negative. In the region of positive R_η there is only one peak. Figure 2 shows the distribution of $R\eta$ and $I\eta$ up to the peak, and shows for comparison curves obtained from the equations

$$R_{*\eta} = \eta_\eta (1 - \text{Cos } \omega\tau),\ I_{*\eta} = \eta_\eta \sin \omega\tau$$

for three different choices of η_η and τ, corresponding to the step-function distributions shown on the previous Figure 1. It appears that, despite the great difference in the analytic form, equations of this type, based on the

I, C, Combustion Response (cont.)

sensitive time lag concept, are apt to represent quite well the actual behavior around the maximum of R_η . This is particularly true if one concentrates on reproducing well only one of the two curves, for instance R_η, on which the energy feedback depends.

The conclusion to be drawn from these considerations is that the sensitive time lag formulation, in its simplicity, can represent quite well more realistic cases, provided one disregards all higher frequency ranges of instability and keeps only the one corresponding to the lowest frequency. This conclusion, derived from the heuristic formulation presented above, seems to apply also to combustion models based on more physical grounds. It applies, for instance, to the feedback factor calculated numerically by Heidmann on the grounds of the droplet evaporation model. This is shown by Figure 2, where the feedback factors based on Heidmann's calculations for two different pressure oscillation amplitudes are plotted as a function of the frequency (dashed curves), and correspond quite well with the curves obtained with appropriate values of n and τ, provided the comparison is limited to a range of frequency around the peak of feedback. All of these considerations help to give a certain amount of confidence in the sensitive time lag combustion model, and its capability to represent quite well the energy feedback in the region where this assumes dangerous values. However, in general, it is meaningless to look for an immediate correspondence between the values of n and τ and the fundamental combustion processes.

I, C, Combustion Response (cont.)

3. Velocity Sensitive Combustion

It is desirable to take a closer look at the dynamic aspects of velocity sensitive combustion. The most significant velocity effects are those resulting from the radial and tangential components of the gas velocity perturbation. In the case of purely transverse modes, the longitudinal velocity perturbation component is always much smaller than the transverse components. In addition, the longitudinal component vanishes at the injector face and has its smallest magnitude in the early combustion zone, the region which appears to have the greatest significance for transverse modes. It is possible that in certain combustion chambers the axial spreading of the combustion will result in sizable longitudinal velocity oscillations for higher order longitudinal or combined transverse-longitudinal modes. However, in such cases the pressure perturbation will become correspondingly small in that region, thus, the decreased pressure effect will cancel the increased velocity effect. In the present analysis, therefore only the effects of the transverse velocity oscillations will be considered in the combustion response.

Of the various intermediate processes occurring during the combustion of liquid bipropellants, those most sensitive to velocity are the vaporization of the liquid droplets and the mixing of the vaporized propellants that must precede chemical reaction. The theoretical study of unsteady vaporization by Wieber and Mickelsen (Ref. 1) indicates that the evaporation rate is dependent on the absolute magnitude of the relative velocity between droplet and gas, therefore, the vaporization velocity effect is seen to be essentially nonlinear, and cannot be treated within the framework of a linearized theory. On the other hand, the mixing of the propellants by the oscillating velocities may be linearized, and gives rise to important modifications of the stability behavior of a combustor. Although no detailed description of such a complex phenomenon is now

I, C, Combustion Response (cont.)

possible, the following discussion illustrates one process by which the burning rate may be caused to oscillate by an oscillating transverse gas velocity.

Consider first the mixture of gaseous combustion products, vaporized propellants (oxidizer and fuel), and liquid propellant droplets at some axial station downstream from a fuel-on-oxidizer impinging doublet injector element. Since liquid mixing is imperfect, some stratification will exist in the mixture. For concreteness, assume that the line of centers of the doublet is aligned tangentially (i.e., normal to a radius). Then the stratification is almost entirely in the tangential direction, as shown schematically in Figure 3 by the lines of constant mass fraction of vaporized oxidizer in the mixture γ_x. The exact shape of the constant γ_x contours will be dependent on the injector design, operating conditions, and propellant characteristics. Because of the turbulence in the combustion chamber, the stratification pattern shown represents only a mean condition.

As a droplet evaporates, the vapor diffuses away and must mix with the other vaporized propellant in the propellant proportions for chemical reaction. In a rocket combustor, the transport and mixing are most likely to be carried out by turbulence rather than by molecular diffusion. The overall burning rate of a fuel-rich droplet will, therefore, be a function of the amount of oxidizer vapor near the droplet. In the presence of small, periodic tangential gas velocity oscillations ($w'e^{i\omega t}$), the gaseous mixture will be displaced relative to the droplets, causing oscillations of the local mass fractions of both oxidizer and fuel. Since a fuel droplet is in an oxidant-deficient region, a velocity perturbation which increases the oxidizer fraction in the vicinity of the droplet will increase the contribution of that droplet to the overall burning rate. The opposite is true for an oxidizer-rich droplet subject to the same perturbation,

I, C, Combustion Response (cont.)

since an oxidizer fraction increase corresponds to a fuel fraction decrease. Thus, the effects of the same velocity perturbation on the two droplets will tend to cancel, unless the propellants have significantly different vaporization rates. In the latter case, at any axial station, there will be a greater number of droplets of the less-volatile propellant, and summation of the velocity effect over all of the droplets in the spray will result in a net contribution to the burning rate. This contribution will clearly depend on the amplitude of the velocity as well as its direction. For small perturbations, and for the doublet spray shown in Figure 3a, the burning rate contribution can be written in the form

$$f' = \ell w' \, e^{i\omega t}$$

where ℓ is a velocity interaction index analogous to the pressure interaction index defined by Crocco. In the case of an arbitrarily oriented spray, such as shown in Figure 3b, the burning rate perturbation due to velocity effects becomes

$$f' = (\ell_r v' + \ell_t w')e^{i\omega t} \qquad (27)$$

so that, in general, two velocity indices are necessary.

It is clear that this linearized expression will not be valid for all types of injection patterns. For example, approximately linear effects can be expected with a fuel-on-oxidizer double and for a like-on-like pattern if the spacing between unlike fans is sufficiently small. However, for large spacings, nonlinear velocity effects must be taken into consideration.

At present, the magnitudes of the velocity indices cannot be calculated because of the lack of quantitative knowledge of the processes involved in liquid propellant combustion under turbulent conditions.

I, C, Combustion Response (cont.)

It is also possible to formulate the above discussion in terms of displacement interaction indices. Letting the radial and transverse components of the displacements be $\delta_r e^{i\omega t}$ and $\delta'_{\theta e}{}^{i\omega t}$, the net combustion process rate perturbation can be written

$$f' = (m_r \delta_r + m_\theta \delta'_\theta) e^{i\omega t} \tag{28}$$

It is clear that $m_r = i\omega l_r$ and $m_\theta = i\omega l_r$. Thus, the displacement indices present at 90° phase shift with respect to the velocity indices.

The analysis of the effects of velocity (or displacement) sensitivity on the stability of a combustor is considerably simplified by assuming that the velocity effects occur during the same internal (the sensitive time lag) as the pressure effects. In this case, the burning rate perturbation becomes

$$Q' = \bar{Q} P p'[X_i(t)] + R v'[X_i(t)] + T w'[X_i(t)] \tag{29}$$

where

$$P = n(1-e^{-\sigma\tau})$$
$$R = \ell_r(1-e^{-\sigma\tau})$$
$$T = \ell_\theta(1-e^{-\sigma\tau})$$

In equation (29), additional simplifications have been introduced by assuming that all propellant elements have equal mean sensitive time lags, and that the space lag associated with the sensitive time lag is

I, C, Combustion Response (cont.)

a negligible fraction of the wave length. In general, of course, the mean sensitive time lag varies from one propellant element to another. Crocco and Cheng have shown that this nonuniformity of the sensitivity time lag leads to increased stability of the combustor. Therefore, the assumption of a uniform time lag produces a conservative stability prediction.

It would be possible to generalize the burning rate expression to allow for different time lags for pressure and velocity effects. However, both mathematical and physical considerations indicate the desirability of the simpler formulation.

4. Approximate Treatment of Nonlinear Combustion Response

Nonlinearities associated with oscillatory combustion chamber operation can derive from two sources: (1) the fluid mechanical behavior of the gases in the chamber, and (2) the dynamics of the combustion process. It is clear that significant interactions between the two kinds can also occur. The general nature of nonlinear effects, with particular emphasis on the fluid mechanical aspects, is discussed in Section IE. The studies of Priem and Guentert have shown that combustion process nonlinearities can be important even for oscillation amplitudes less than 20% of the mean chamber pressure. Thus, it is worthwhile to consider nonlinearity of the combustion response while retaining the linearized fluid mechanical analysis with its attendant simplification.

To insert nonlinear combustion dynamics into the framework of the linear theory, some method of equivalent linearization must be used. The method selected in this analysis is the "describing function" method.

I, C, Combustion Response (cont.)

When a sinusoidal signal is input to a nonlinear element, the output will not, in general, be sinusoidal. Fourier analysis of the output will reveal many frequency components, among which is one (the fundamental) that corresponds to the frequency of the input signal. For the analysis of stability, only the fundamental frequency component is required, as shown by Reardon (Ref 2). An equivalent linear transfer function for the nonlinear element can be defined as the ratio of the fundamental component of the output to the input. Thus, if

$$I(t) = I_e^{i\omega_f t}$$

is the input, and

$$O(t) = O_f(\omega_f)e^{i\omega_f t} + \Sigma O_j e^{i\omega t} \qquad (30)$$

$$j \neq f$$

is the output, the equivalent linear transfer function is

$$TF = \frac{O_f(\omega_f)}{Ie}$$

For nonlinearities that can be treated by this method, linear behavior is obtained for limiting values of the input (e.g., I 0 or I). It is convenient to define a "describing function" f as

$$f(\omega) = {}^{TF}/_{(TF)_{LIN}} \qquad (31)$$

where $(TF)_{LIN}$ is the limiting linear transfer function. Thus, a linear analysis can be extended to include isolated nonlinear effects by replacing the linear transfer function of the nonlinear element by $f(\omega) \cdot (TF)_{LIN}$.

I, C, Combustion Response (cont.)

In applying this approach to the combustion instability problem, it is assumed that the only significant nonlinearities are those associated with the response of the combustion process to pressure and velocity perturbations. Three describing functions are required, corresponding to the combustion response to pressure, radial velocity, and tangential velocity perturbations. Thus, the combustion rate perturbation becomes

$$Q' = \bar{Q}[f_p(p')Pp' + f_R(v')\,Rv' + f_T(W')\,TW'] \qquad (32)$$

In the above expression, the dependence of the describing functions on the perturbation (input) amplitude is shown explicitly. This dependence on amplitude introduces complications into the solution of the perturbation equations. In general, the input amplitude is a function of the axial, as well as the transverse, space coordinate. To obtain a solution, it is necessary to introduce the additional simplification of neglecting the axial variation of perturbation amplitude in the evaluation of the describing function. For purely transverse modes, this is not an unreasonable approximation, and it breaks down significantly only for higher-order longitudinal modes. The error made by using the perturbation amplitudes at the injector face will be small.

To calculate the describing functions, it is necessary to know the shape of the combustion response to each perturbation. Since it is assumed that the effects are independent of each other, the burning rate perturbation can be written

$$\frac{Q'}{\bar{Q}} = \phi_P(p') + \phi_R(v') + \phi_T(w')$$

I, C, Combustion Response (cont.)

The procedure for calculating each describing function is the same; therefore, it is necessary only to discuss one, say, the pressure-effect describing function.

The input perturbation is '/-- = Pcosψ where $\psi = \omega t$ and, from Fourier analysis the fundamental term of the output series is

$$\theta_{Pf}(P) = \frac{1}{\pi} \int_{C-\pi}^{C+\pi} \phi_P(P\cos\psi) e^{-i\psi} d\psi$$

Thus, the describing function is given by

$$f_P = \frac{1}{\pi P (TF)_{LIN}} \int_{C-\pi}^{C+\pi} \phi_P \ (P\cos\psi) e^{-i\psi} d\psi \qquad (33)$$

In the expressions above, C is an arbitrary constant, and $(TF)_{LIN}$ is a suitable normalizing factor, such that f→1 for equivalent linear operation. The choice of $(TF)_{LIN}$ and depends on the characteristics of each nonlinear response function, and a general rule does not appear feasible.

The describing function method applies well to nonlinearities with odd symmetry (Figure 4a). It is not applicable to response functions with even symmetry, such as the velocity effect on vaporization, since there is no contribution to the fundamental term of the Fourier series. An intermediate case is that of asymmetric response function (Figure 4b). In this case, there will be a significant contribution to the fundamental oscillation, but a change in the mean burning rate as well. This change in the mean burning rate occurs only during the sensitive portion of the total time lag and so will have a negligible influence on the steady-state solution.

I, C, Combustion Response (cont.)

In general, the describing function is complex; that is, the nonlinear combustion response introduces a phase shift as well as an amplitude change. However, for response functions with odd symmetry, the fundamental component of the output is in phase with the input, so that the describing function is real.

D. NOZZLE ADMITTANCE COEFFICIENTS

In any rocket combustion instability analysis, it is desirable to apply a boundary condition at the nozzle entrance to describe the effect of the nozzle upon wave motion in the combustion chamber. In a linearized analysis, this boundary condition is written in the form of an admittance relation; that is, a linear relation between the perturbations of two thermodynamic properties and of the velocity components. The coefficients in this relation are termed admittance coefficients and are calculated by means of an analysis of the oscillatory flow in the nozzle. In this section, the analysis and numerical integration which lead to the determination of these coefficients are discussed.

The divergent portion of the supercritical nozzle need not be analyzed; all that is pertinent is the subsonic flow in the convergent portion since any disturbances to the supersonic flow cannot propagate upstream through the throat. Therefore, disturbances in the subsonic portion of the nozzle and in the chamber are neither affected nor caused by disturbances in the supersonic region. (The opposite, however, is not true.)

To date, two types of nozzles have been analyzed: axisymmetric designs and two-dimensional designs. The axisymmetric case is presently the one of the most practical significance and is the one to be discussed here. The two-dimensional case applies to thin annular chambers and to certain experimental configurations. The analyses of the two cases are similar; details of both are given in Reference 3.

I, D, Nozzle Admittance Coefficients (cont.)

The unperturbed, or steady-state, flow is considered to be one-dimensional in order to simplify the analysis. The perturbed flow, however, may be three-dimensional. The combustion process is assumed to be completed before the flow enters the nozzle so that there are no source terms in the differential equations of motion. The equations do allow for the occurrence of entropy waves and vorticity waves in the nozzle due to the combustion chamber.

The three-dimensional coordinate system (Figure 5) employs the values of the velocity potential ϕ and the stream function ψ of the unperturbed flow in addition to the azimuthal angle, with

$$\bar{q} = \frac{\partial \phi}{\partial s}$$

$$r\rho\bar{q} = \frac{\partial \psi}{\partial n}$$

where s is the streamline direction and n is the direction normal to the streamline. Since the value of the stream function is a constant at the nozzle walls where the boundary conditions are applied, separation of variables is allowed. Culick (Ref 4) did not use this coordinate transformation and was forced to a more cumbersome analysis.

Under the usual assumption of small-amplitude oscillations, linear partial differential equations are obtained that govern the perturbations. These equations are separated under the assumption that the nozzle is sufficiently long that the cosine of the semi-angle of convergence may be approximated by unity. The time and azimuthal dependencies are given by sinusoidal functions. The radial dependencies are given in terms of Bessel functions of the first kind and their derivatives. The axial dependencies are related to

I, D, Nozzle Admittance Coefficients (cont.)

the solution to a certain sound-order linear ordinary differential equation with complex-variable coefficients which can only be obtained in exact form by numerical integration.

This second order differential equation is singular at the throat; one of the homegeneous solutions will be regular there and the other one will be singular. The singular solution is cast away. This procedure has been demonstrated to be equivalent to disallowing perturbations to propagate upstream from the supersonic portion of the nozzle (Ref 5).

It has been shown that the admittance coefficients are functions of the solutions to certain first order equations that are obtained by reduction of the original second order equation. So, while it would be necessary to integrate the second order equation in order to determine the variation of the flow properties, it is not necessary for the purpose of determining the admittance coefficients. Since the interest lies in the prediction of global stability characteristics and not in the details of the flow itself, only the equations immediately needed to determine the admittance coefficient will be presented. The derivations and additional analyses may be found in Reference 3.

The admittance coefficients for a given geometry are determined as functions of the axial coordinate or, equivalently, of the local mean-flow Mach number. This implies that, when the admittance coefficient at the nozzle entrance is desired, the axial coordinate at the entrance or the entrance Mach number must be known before the admittance coefficients can be determined.

I, D, Nozzle Admittance Coefficients (cont.)

The linear admittance condition is given by

$$\gamma U + AP + \gamma B\, S_{v\eta}\, V + \gamma CS = 0 \tag{34}$$

where U, P, B, and S are the axial dependencies of the nondimensional perturbations of axial velocity, pressure, radial velocity, and entropy, respectively. The admittance coefficients A, B, and C are given by

$$A = \left(\frac{\gamma+1}{2}\right)^{\frac{\gamma+1}{2(\gamma-1)}} \frac{\bar{q}}{\bar{c}\left(\frac{2}{\gamma-1}\right)} \quad \frac{c^{2}\hat{\xi}\ (1)\ \hat{\zeta}}{\bar{q}^{-2}\ (\bar{c}^{-2}\hat{\xi}\ (1)\ -\ \hat{\zeta})\ -\ (1/2)\ i\hat{\omega}}$$

$$B = iS_{v_\eta} \frac{\hat{wq}^{-1/2}}{\bar{c}\ \left(\frac{1}{\gamma-1}\right)} \quad \frac{c^{-2\hat{\xi}}\ (1)}{\bar{q}^{-2}(\bar{c}^{-2}\hat{\xi}\ (1)\ -\ \hat{\xi})\ -\ (1/2\ i\hat{\omega}} \tag{35}$$

$$C = \left(\frac{2}{\gamma+1}\right)^{1/2} \frac{}{\bar{q}\bar{c}^{-2}} \quad \frac{(1/2)(1-\bar{q}^{-2})\ \hat{\xi}\ (1)\ -\ (1/2)i\hat{\omega}\ (2)+f_3\ \hat{\xi}}{\bar{q}^{-2}(\bar{c}^{-2}\ \hat{\xi}\ (1)\ -\ \hat{\zeta})-\ (1/2)i\hat{\omega}}$$

in which $\bar{q}$ and $\bar{c}$ are the local gas velocity and speed of sound nondimensionalized with respect to the steady-state speed of sound at the throat. The admittance coefficients are complex because $\hat{\zeta}$, $\hat{\xi}(1)$, $\hat{\xi}(2)$, f_3 and $i\omega$ are complex. The auxiliary functions $\hat{\zeta}$, $\hat{\xi}$ (1), $\hat{\xi}(2)$ are given by first order differential equations in the axial coordinate ϕ:

I, D, Nozzle Admittance Coefficients (cont.)

$$\left(\frac{d\hat{\zeta}}{d\hat{\phi}} + \hat{\zeta}^2\right) = (g + ih)\,\hat{\zeta} - (j - ik) \tag{36}$$

$$\frac{d}{d\hat{\phi}}\left[(1-\bar{q}^2)\hat{\xi}^{(1)}\right] = -\left\{\hat{\zeta} - i\hat{\omega}\left(\frac{1}{2\bar{q}^2} + \frac{2}{(\gamma+1)(1-\bar{q}^2)}\right)\right\}\left[(1-\bar{q}^2)\,\hat{\xi}^{(1)}\right]$$

$$+ \frac{2}{\gamma+1}\,\frac{\hat{S}^2_{\nu\eta}}{4}\,\frac{(\bar{c})^{\frac{2}{\gamma-1}}}{\bar{q}} \tag{37}$$

$$\frac{d}{d\hat{\phi}}\left[(1-\bar{q}^2\ \xi^{(2)}\right] = -\left\{\hat{\zeta} - i\hat{\omega}\left(\frac{1}{2\bar{q}^2} + \frac{2}{(\gamma+1)(1-\bar{q}^2)}\right)\right\}\left[(1-\bar{q}^2)\,\xi^{(2)}\right]$$

$$+ \frac{2}{\gamma+1}\,\frac{d_{f3}}{d\hat{\phi}} + \frac{S_{\nu\eta}{}^2\bar{c}\left(\frac{2}{\gamma-1}\right)}{2\,i\hat{\omega}}\left(\frac{1-\bar{q}^2}{2\bar{q}^2} + \frac{\bar{c}^2}{\bar{q}^2} + \frac{\bar{c}^2}{\bar{q}^2}\,f_3\right) \tag{38}$$

where the following definitions apply:

$$b = \bar{q}^2\,(\bar{c}^2 - \bar{q}^2)$$

$$g = \frac{\gamma+1}{2}\,\frac{\bar{q}^2}{\bar{c}^2}\,\frac{d\bar{q}^2}{d\hat{\phi}}$$

$$h = \hat{\omega}\,\bar{q}^2$$

$$j = \frac{\hat{\omega}^2}{4}\,\frac{\bar{q}\,\bar{c}^{\frac{2}{\gamma-1}}}{4}\,S^2_{\nu\eta}$$

$$k = \frac{\gamma-1}{4}\,\frac{\bar{q}^2}{\bar{c}^2}\,\frac{d\,\bar{q}^2}{d\hat{\phi}}\,\hat{\omega}$$

I, D, Nozzle Admittance Coefficients (cont.)

$$\hat{\phi} = 2\kappa \quad (\phi - \phi_{th})$$

$$\hat{\omega} = \omega/\kappa$$

$$\hat{S}_{\nu\eta} = S_{\nu\eta}/\kappa$$

$$\kappa = \frac{dq}{dZ}_{th} = \kappa$$

where the angular frequency ω is nondimensionalized with respect to the throat speed of sound divided by the throat radius, $s_{\nu\eta}$ is the eigenvalue for the particular mode of oscillation, and the subscript th denotes conditions at the throat.

The nonlinear, first order equation for $\hat{\zeta}$ is a complex Riccati equation and may only be solved by numerical integration. Once this is done, the linear, first order equations for $\hat{\xi}$ (1) and $\xi(2)$ may be solved obtaining the standard integral forms. However, rather than numerically evaluating the integral solutions, it is more convenient to solve all three complex (or six real) equations simultaneously by numerical integration.

The numerical integration requires statements of the initial conditions. These are provided by the condition of regularity at the throat ($\hat{\phi} = 0$). After assuming a Taylor series expansion about the throat and evaluating the coefficients in the series, we find the following

$$\hat{\zeta}(0) = \alpha_0 + i\beta_0$$

$$\hat{\xi}^{(1)}(0) = 0$$

$$\xi^{(2)}(0) = 0$$

I, D, Nozzle Admittance Coefficients (cont.)

where

$$\alpha_0 = \frac{\frac{\gamma+1}{2}\left(\frac{\hat{\omega}2 - S_{\nu\eta}{}^2}{4}\right) - \frac{\gamma-1}{4}\hat{\omega}^2}{\omega^2 + \left(\frac{\gamma+1}{2}\right)^2}$$

$$\beta_0 = -\frac{\frac{\gamma^2-1}{8} + \frac{\hat{\omega}^2 - S_{\nu\eta}{}^2}{4}}{\hat{\omega}^2 + \left(\frac{\gamma+1}{2}\right)^2}$$

Since the Riccati equation is singular at the throat $(\bar{c}^2 - \bar{q}^2 = 0)$, the numerical integration cannot begin exactly there. So, in addition to the above conditions, the first derivative of $\hat{\xi}$ at the initial point must be obtained from the regular expansion and supplied to the numerical integration scheme. This initial condition is:

$$\left(\frac{d\hat{\zeta}}{d\hat{\phi}}\right)_{th} = \alpha_1 + i\beta_1$$

where

$$\alpha_1 = \frac{1}{\hat{\omega}^2 + (\gamma+1)^2}\left\{\frac{(\gamma+1)^2}{2}(\alpha_0{}^2 - \beta_0{}^2) + (\gamma+1)\hat{\omega}\ \alpha_0\beta_0\right.$$

$$+ \left[\hat{\omega}^2 + \frac{(\gamma+1)^3}{4} + (\gamma+1)^2\,\tilde{b}\right]\alpha_0 + \frac{(\gamma+1)(\gamma-3)}{4}\hat{\omega}\ \beta_0$$

$$\left. + \frac{\gamma^2-1}{8}(\hat{\omega}^2 - S_{\nu\eta}) + \frac{\gamma-1}{2}\hat{\omega}^2\ \tilde{b}\right\}$$

I, D, Nozzle Admittance Coefficients (cont.)

$$\beta_1 = \frac{1}{\hat{\omega}^2 + (\gamma+1)^2} \left\{ (\gamma+1)^2 \alpha_0 \beta_0 - \frac{\gamma+1}{2} \hat{\omega} \quad (\alpha_0^2 - \beta_0^2) \right.$$

$$+ (\gamma+1) \frac{1-\gamma}{2} \hat{\omega} \quad \alpha_0 - (\gamma+1) \hat{\omega} \alpha_0 \tilde{b} + [\hat{\omega}^2 + \frac{(\gamma+1)^3}{4}] \beta_0$$

$$\left. + \frac{\gamma-1}{8} \hat{\omega} [S_{\nu\eta}^2 + (\gamma+1)^2] + \frac{\gamma^2-1}{2} \hat{\omega} \tilde{b} \right\}$$

Note that $\tilde{b}$ is a coefficient in the power series expansion for $\bar{q}^{-2}$. That is, $q^2 = 1 + \hat{\phi} + b \hat{\phi}^2 . . . . . .$, the value of $\tilde{b}$ being determined by the nozzle geometry in the throat vicinity. The above-mentioned power series shows the convenience of the transformation of the independent variable from ϕ to $\hat{\phi}$; the coefficient of the first order term in the power series is unity.

The function f_3 is given by an integral expression involving known quantities. However, it is more convenient to solve a first order differential equation for f_3 simultaneously with the equations for $\hat{\zeta}$, $\hat{\xi}^{(1)}$, and $\xi^{(2)}$. The proper equation is follows:

$$\frac{d}{d\hat{\phi}} (\bar{c}^{-2} f_3) - \frac{i\hat{\omega}}{2\bar{q}^{-2}} (\bar{c}^{-2} f_3) = \frac{1}{2} \frac{d\bar{q}^{-2}}{d\hat{\phi}} \qquad (39)$$

Subject to the initial condition that $f_3 (0) = 0$.

In addition to the admittance coefficients A, B, and C, two other complex admittance coefficients are useful and have been calculated. They are

I, D, Nozzle Coefficients (cont.)

$$\alpha = -\left(\frac{\gamma+1}{2}\right)^{\frac{\gamma+1}{2(\gamma-1)}} \frac{\bar{q}}{\bar{c}^{-2}/\gamma-1)} \frac{\hat{\zeta}}{\bar{q}^{-2} + i\frac{\hat{\omega}}{2}} \qquad (40)$$

$$E = A - \frac{S_{\nu\eta}\, B}{i\, \omega_c}$$

where ω_c is the frequency nondimensionalized by the ratio of the steady-state stagnation speed of sound to the nozzle entrance radius.

α is the admittance coefficient to be used in the relation $U = (\alpha/\gamma)P$ at the nozzle entrance in the absence of vorticity and entropy perturbations. Of course, when $s_{\nu\eta} = 0$, α is also the admittance coefficient for isentropic longitudinal oscillations.

E is a combination of A and B which becomes important in transverse-mode combustion instability applications. It can be shown that for low Mach numbers, α and -E are approximately equal. This means that at low mean-flow Mach numbers E becomes approximately independent of $\hat{\xi}^{(1)}$ even though A and B are dependent upon it.

The steady-state velocity profile $\bar{q}\ (\hat{\phi})$ must be determined for the given geometry of the convergent portion of the nozzle. This cannot be found in closed form but must be determined either approximately or indirectly. It is difficult to find an approximate form of $\bar{q}\ (\hat{\phi})$ which is very accurate over a wide class of nozzle geometries. Therefore, an indirect approach is used, in which the exact form of $\bar{q}\ (\hat{\phi})$ is determined and a table constructed. This method proceeds as follows: The shape of the nozzle is prescribed as a portion of a cone with circular-arc sections at the throat and at the transition section at the nozzle entrance (Figure 6). With the cone angle

I, D, Nozzle Coefficients (cont.)

and the radii given, the cross-sectional area at any axial station can be calculated. A table is constructed that relates the local Mach number to the area, according to the equation

$$\frac{A(Z)}{A_{th}} = \frac{1}{M(z)} \left[\left(\frac{2}{\gamma+1}\right) \left(1 + \frac{\gamma-1}{2} M^2(Z)\right)\right]^{\frac{\gamma+1}{2(\gamma-1)}} \tag{41}$$

The Mach number at each station in the nozzle is then obtained by interpolation in this table. The velocity $\bar{q}$ is related to the Mach number by

$$\bar{q}^2 = \frac{\frac{\gamma+1}{2} M^2}{1 + \frac{\gamma-1}{2} M^2} \tag{42}$$

Finally, the velocity potential is obtained by integration along the nozzle, starting from the throat Z = 0, where $\hat{\phi}$ is assigned the value zero:

$$\hat{\phi} = 2 \kappa \int_0^Z \bar{q} \, dZ' \tag{43}$$

To illustrate the nature of the solution for the nozzle admittance coefficients, calculations have been performed for a conical nozzle with no transition section at the nozzle entrance. The advantage of using such an approximation to the usual smooth transition is that the variation of the admittance coefficients with chamber Mach number can be seen from the results of a single integration. Results for $\gamma = 1.2$, $\hat{\omega} = 0.5$ and $S_{\nu\eta} = 1.0$ are shown in Figures 7 to 9.

One of the most interesting results is that the nozzle may have a destabilizing effect upon the transverse modes of oscillation. This is indicated by negative values of the real part of α and positive values of the real

I, D, Nozzle Admittance Coefficients (cont.)

part of E. (The importance of the signs of these quantities will be discussed in Section I E.) Negative α_r and positive E_r generally seem to occur in the range of "purely" transverse modes where ω_c is close to $S_{\nu\eta}$. So here the nozzle would have a destabilizing effect. For longitudinal modes and those mixed modes where the longitudinal dimensions are most significant in determining the frequency ($\omega_c >> S_{\nu\eta}$), α_r is positive and E_r is negative so that the nozzle has a damping effect upon the oscillations.

Numerical calculations indicate that the value of the admittance coefficient C are generally quite small compared to the coefficients A and B. This and the fact that the amplitude of the entropy oscillation is small compared to the amplitude of the pressure and velocity oscillations in most situations of physical interest mean that usually (34) may be simplified to the following form

$$U + AP + S_{\nu\eta}\, BV = 0 \qquad (44)$$

In Figure 7, $\hat{\xi}_r$ is plotted versus axial distance showing a gradual change in $\hat{\xi}_r$ due to the relatively large pressure wavelength. Figure 8 shows $\hat{\xi}_r$ (2) to be undulating* rapidly due to the relatively small entropy and vorticity wavelengths. Note, of course, that pressure waves propagate with the speed of sound while entropy and vorticity waves propagate with the subsonic gas velocity. Figures 9 and 10 show the admittance coefficients A_r and B_i (which are the most pertinent from a stability point of view) plotted versus axial distance. Superimposed upon a gradual change due to the pressure waves, there is a rapid undulation due to the entropy and vorticity waves.

At higher frequencies the oscillations become more severe since undulations in the admittance coefficients occur due to pressure waves in that case. The undulations due to entropy and vorticity waves become still more rapid.

*"Undulation" pertains to space-wise variations while "oscillation" pertains to time-wise variations.

I, D, Nozzle Admittance Coefficients (cont.)

A limited number of calculations have been performed wherein the throat wall curvature, the cone angle, and the ratio of specific heats have been changed. It was found that changing the last parameter from the standard value of $\gamma = 1.2$ to $\gamma = 1.4$ generally produced a change in the admittance coefficients of only a few percent. The other two parameters affected the results more significantly.

Calculations were made with R = 3.0 (versus R = 2.0 in the standard cases) and $\theta_1 = 30°$ and also with R = 2.0 and $\theta_1 = 15°$ (versus $\theta_1 = 30°$ in the standard cases). When R was changed and θ_1 left constant, the results changed most significantly in the high Mach number range near the throat. Further upstream in the low Mach number range, the difference between the R = 2.0 and R = 3.0 cases is smaller. On the basis of this small amount of evidence, it seems that far away from the throat the results do not depend very strongly on the particulars of the nozzle shape near the throat. When θ_1 was changed and R left constant, the solution near the throat did not change, of course. Only in the conical portion of the nozzle was a change produced.

It should be noted that the results of the calculations for the standard three-dimensional axisymmetric nozzle may be scaled for use with certain annular nozzles. The major restriction is that the inner wall of the annular nozzle must have the same shape as a stream tube contour in the three-dimensional nozzle. This implies that the two nozzle flows are identical in the steady-state (that is, of course, only in the common region where both flows exist). Also, under the long-nozzle, one dimensional steady-state flow assumption this means that the ratio of the outer wall radius to the inner wall radius is constant along the convergent section of the nozzle.

The equations for the annular nozzle may be separated in the same manner and the same differential equations remain to be integrated as in the

I, D, Nozzle Admittance Coefficients (cont.)

three dimensional case. However, now $S_{\nu\eta}$ is no longer the hth root of $j'_\nu(x) = 0$ but rather it is the hth root of $J'_\nu(x)\, Y'_\nu(x) - J'_\nu(\beta x)\, Y'_\nu(x) = 0$. Here J_ν and Y_ν are Bessel functions of the first and second kind, respectively, and β is the ratio of the inner to outer wall diameter. (ν is an integer, here.) So using the proper value of $S_{\nu\eta}$, the results of the three dimensional nozzle calculations for both admittances and flow properties may be used for the annular nozzle. The values of $S_{\nu\eta}$ for various annuli may be found in Reference 29.

The admittance coefficients for a whole family of nozzles may be obtained by scaling the results calculated for a particular reference nozzle. If k is the scale factor and if a nozzle has a velocity distribution

$$\bar{q}(Z) = \bar{q}_{ref}(kZ)$$

then the admittance coefficients for this nozzle are given by the following formulas

$$A(\bar{q}, \omega, s) = A_{ref}\left(\bar{q}, \frac{\omega}{k}, \frac{s_{\nu\eta}}{k}\right)$$

$$B(\bar{q}, \omega, s) = k\, B_{ref}\left(\bar{q}, \frac{\omega}{k}, \frac{s_{\nu\eta}}{k}\right)$$

$$C(\bar{q}, \omega, s) = C_{ref}\left(\bar{q}, \frac{\omega}{k}, \frac{s_{\nu\eta}}{k}\right)$$

$$E(\bar{q}, \omega, s) = E_{ref}\left(\bar{q}, \frac{\omega}{k}, \frac{s_{\nu\eta}}{k}\right)$$

$$\alpha(\bar{q}, \omega, s) = {}_{ref}\left(\bar{q}, \frac{\omega}{k}, \frac{s_{\nu\eta}}{k}\right)$$

I, D, Nozzle Admittance Coefficients (cont.)

A scale transformation of this type is merely a linear deformation of the nozzle walls in the axial direction. Scaling in the radial direction is trivial since all lengths have been nondimensionalized with respect to the throat radius.

The extension of the theory to the nonlinear case is discussed in References 3 and 6.

I, Theory (cont.)

E. CHARACTERISTIC EQUATION

1. Formulation of the Stability Problem

Solution of the perturbation equations gives the pressure perturbation in the form of a Bessel-Fourier series:

$$p' = P_{oo}\left[p_{\nu\eta}(Z)\,\psi_{\nu\eta}(r)\cos_{\nu}(\theta) + \sum\sum_{p\neq\nu,\,q\neq\eta} P_{pq}(Z)\,\psi_{pq}(r)\Theta_{\nu}(\theta)\right] \qquad (45)$$

In this expression the indicates ν and η refer to the fundamental term, that is, to the oscillatory mode under consideration. The other terms in the series account for the distortion introduced by flow, injection distribution, velocity effects, and nonlinear combustion response. For values of the indices p, q different from ν, η, each term in the series includes an integration constant. However, the integration constant for the fundamental term can be shown to be of order M^3, and so can be neglected in the present analysis. The constant P_{oo} represents the perturbation amplitude level; in this linearized analysis, the amplitude has no effect on the stability solution.

Since the perturbation solution is obtained in the form of a series, the nozzle admittance boundary condition must be applied term by term. For each p, $q \neq \nu, \eta$, the nozzle boundary condition can be used to determine the integration constant. Application of the remaining condition,

$$\gamma\, U_{\nu\eta}(Z_E) + AP_{\nu\eta}(Z_E) + Bs_{\nu\eta}\,\gamma\, V_{\nu\eta}(Z_E) + C\,\gamma\, S_{\nu\eta}(Z_E) = 0 \qquad (46)$$

results in an eigenvalue problem. That is, this equation is the characteristic equation for the eigenvalues $\sigma = \lambda + i\omega$. For a given combustor geometry and for a given value of the combustion parameters, n, τ, ℓ_r, and ℓ_θ, the

I, E, Characteristic Equation (cont.)

characteristic equation can, in principle, be used to determine the frequency of oscillation ω and the growth rate λ of the perturbation amplitude.

However, since the coefficients of the characteristic equation are functions of the variable σ, it is more convenient to regard σ as one of the independent variables. Considerable simplification results if $\lambda = 0$, that is, $\sigma = i\omega$, which is interpreted physically as an oscillation, the amplitude of which neither grows nor decays with time. The neutral condition is clearly the boundary between stable and unstable operation, and is sometimes referred to as the stability limit.

For neutral oscillations, regarding the frequency as an independent variable, the characteristic equation becomes a relation between the combustion parameters. Since the equation is complex, two of the combustion parameters can be determined in terms of the other two. It is natural to select the sensitive time lag τ and the pressure interaction index n as the dependent variables, because these parameters are significant to all modes of oscillation. Following this procedure, the characteristic equation can be written in the form:

$$n\,(1 - e^{-i\omega\tau}) = \frac{h\,(\omega)}{A + B\,(\frac{\ell_r}{n}) + C\,(\frac{\ell_\theta}{n})} = \tilde{h}_r + i\,\tilde{h}_i \qquad (47)$$

The solution is

$$n\,(\omega, \frac{\ell_r}{n}, \frac{\ell_\theta}{n}) = \frac{\tilde{h}_r^{\,2} + \tilde{h}_i^{\,2}}{2\,\tilde{h}_r} \qquad (48)$$

I, E, Characteristic Equation (cont.)

$$\tau\ (\omega, \frac{\ell_r}{n}, \frac{\ell_\theta}{n}) = \frac{1}{\omega} \sin^{-1} (\frac{h_i}{n}) = \frac{1}{\omega} \cos^{-1} (1 - \frac{h_r}{n}) \qquad (49)$$

where τ is determined to within an additive constant $\frac{2\pi}{\omega}$.

A typical solution for n (ω) and τ (ω) for assumed values of the velocity indixes is shown in Figure 11. This solution applies at the stability limits, where $\lambda = 0$. It can be seen that for any value of τ only one value of n is consistent with neutral oscillations. For the same τ, a larger n corresponds to instability ($\lambda > 0$) and a smaller n to stability ($\lambda < 0$). In the case of transverse modes, for values of n in the range of interest (≤ 2), the frequency varies over a very narrow range, and is very nearly equal to the corresponding acoustic frequency. For longitudinal modes, both the frequency range and the departure from the acoustic-mode frequency are somewhat larger. The narrow frequency range result is related directly to the fact that high frequency instability involves the interaction of the combustion chamber. The chamber acoustics are somewhat modified by the presence of the exhaust nozzle and the mean gas flow, but a good approximation of the resonant frequencies can be made without reference to the combustion effects.

2. Graphical Representation: The n, τ-Plane

In view of the narrow frequency range, a more convenient graphical representation is obtained by plotting the stability limit curves on the plane defined by the interaction index n as ordinate and the sensitive time lag τ as abscissa. This plot will be referred to as the n, τ-plane. A typical example is shown in Figure 12, in which the stability limit curves for a single mode are seen to divide the n, τ- plane into stable and unstable regions.

I, E, Characteristic Equation (cont.)

According to the sensitive time lag model, the dynamic behavior of the combustion process can be described by the parameters n and τ, which are empirical coefficients measuring the pressure sensitivity and characteristic time, respectively, of the combustion process. It is clear that, in general, these parameters are functions of the propellant combination, the injector pattern, and the operating conditions. A given combination of these factors, that is, a given combustion process, is represented on the n, τ-plane as a point. For a given engine configuration, stability limits can be determined for each oscillatory mode of interest, and the n, τ-plane divided into stable and unstable regions. The stability of the given engine is determined by the relation between the point representing the combustion and the regions defined by the stability limits. If the combustion point lies within the stable region (e.g., point A in Figure 13), stable combustion is expected. On the other hand, if the combustion point lies within an unstable region, oscillations would be expected, with the mode of oscillation corresponding to that of the unstable region. For example, in Figure 13, point B would be unstable in the first tangential mode, whereas point C would oscillate in the third tangential mode.

The basic theory considers only very small perturbations and pressure-sensitive combustion. Therefore, the stability predictions are applicable only to injector patterns or modes which exhibit no velocity effects and to combustion chamber oscillations that grow from the normal, low-level combustion noise. As discussed above, velocity and nonlinear effects can be treated within the framework of the theory, and appear in the characteristic equation in the coefficients A, B, and C, and the indices $\frac{\ell_r}{n}$ and $\frac{\ell_\theta}{n}$. The effect of introducing these effects is to shift the stability limit curves, thereby moving the zones of unstable operation.

I, E, Characteristic Equation (cont.)

To illustrate, consider the stability of a single mode, say, the first tangential. Assuming that the pressure sensitivity is not coupled to the velocity sensitivity, the combustion point on the n, τ-plane remains fixed. Several possible cases can be examined:

a. The injector is insensitive to velocity effects ($\ell_r = \ell_\theta = 0$) or a standing mode is considered ($A = C = 0$). The resulting stability limit is shown in Figure 14 as curve 1. Since the combustion point lies below the limit curve, it is in a stable region, and the combustion noise will not grow into first tangential instability.

b. The injector is sensitive to tangential velocity effects only, with a certain value of $\frac{\ell_\theta}{n}$. In this case, the stability limit curve is shifted downward, for a spinning mode, to curve 2. First tangential mode oscillations growing spontaneously out of the combustion noise are expected.

c. The injector is sensitive to radial velocity effects only, with the same value of the velocity index as in case b. The stability limit curve is curve 3, and stable operation is expected.

d. Nonlinear tangential velocity effects are present, with a deadband type or nonlinearity. Using the describing function method, the following results are obtained:

(1) For pressure amplitudes less than 10% of mean chamber pressure, the stability limit curve is curve 1.

(2) For an amplitude of 20% the limit curve is curve 4.

(3) For an amplitude of 40%, the limit curve is curve 2.

I, E, Characteristic Equation (cont.)

For this situation, it would be predicted that a bomb or pulse producing an amplitude of greater than 20% of mean chamber pressure would be required to initiate oscillatory combustion.

3. Interpretation of Terms in the Characteristic Equation

In order to interpret the terms in the characteristic equation, it is convenient to rederive that equation in a different manner which shows the origins of each term. The same assumptions as before apply. In nondimensional form the equations of motion are written as follows:

Continuity:

$$\frac{\partial \rho}{\partial \tau} + \nabla \cdot \rho \underset{\rightarrow}{q} = Q \tag{50}$$

Momentum:

$$\rho \frac{D\underset{\rightarrow}{q}}{Dt} + \frac{1}{\gamma} \nabla p = (Q + k \rho_\ell) (\underset{\rightarrow}{q_\ell} - \underset{\rightarrow}{q}) \equiv \underset{\rightarrow}{F} \tag{51}$$

Energy:

$$\rho \frac{D}{Dt} \left(\frac{1}{\gamma - 1} \frac{p}{\rho} + \frac{q^2}{2}\right) - \frac{1}{\gamma} \frac{\partial p}{\partial \tau} = Q (h_{\ell s} - h_s) \equiv G \tag{52}$$

where:

$$\frac{D}{Dt} = \frac{\partial}{\partial \tau} + q \cdot \nabla$$

The right-hand sides of (50), (51), and (52) are in the order of the mean flow Mach number.

I, E, Characteristic Equation (cont.)

If the dot product of $\underset{\rightarrow}{q}$ and (51) is subtracted from (52), one obtains

$$\frac{1}{\gamma}\frac{Dp}{dt} - a^2\frac{D\rho}{Dt} = (\gamma-1)\ (G - \underset{\rightarrow}{q}\ .\ \underset{\rightarrow}{F}) \tag{53}$$

The right-hand side of (53) may be shown to be p Ds/Dt. Consider (53) as a replacement for (52).

Now, the time derivative of (53) and the divergence of (51) are subtracted, the time derivative of (50) is employed to eliminate the derivatives of ρ, and other minor rearrangements are made to obtain the following:

$$\frac{1}{\gamma}\frac{\partial^2 p}{\partial t^2} - \frac{a^2}{\gamma}\ \nabla^2 p = a^2\frac{\partial Q}{\partial t} - a^2\ \nabla\ .\ (\underset{\rightarrow}{F} + Q\ \underset{\rightarrow}{q}) - (\nabla\ .\ \rho\ \underset{\rightarrow\rightarrow}{qq})$$

$$+ (\gamma-1)\frac{\partial}{\partial t}\ (G - q\ .\ F) - \frac{\partial}{\partial t}(p\ q\ .\ \nabla\ s)$$

$$+ \frac{\partial\rho}{\partial t}\ \frac{\partial a^2}{\partial t} \tag{54}$$

Equation (54) is the wave equation governing the pressure oscillations in the chamber. It may be perturbed and the equation which governs the first order perturbations (denoted by primes) becomes

$$\frac{1}{\gamma}\frac{\partial^2 p'}{\partial t2} - \frac{1}{\gamma}\nabla^2 p' = \frac{\partial Q'}{\partial t} - \nabla\ .\ (\underset{\rightarrow}{F} + Q\ \underset{\rightarrow}{q}) - (\nabla\ .\ \rho\ \underset{\rightarrow\rightarrow}{qq})$$

$$+ (\gamma-1)\frac{\partial}{\partial t}\ (G - \underset{\rightarrow}{q}\ .\ \underset{\rightarrow}{F})' - \bar{q}\frac{\partial}{dZ}\frac{\partial s'}{\partial t} \tag{55}$$

I, E, Characteristic Equation (cont.)

Again, the mean flow has been considered one-dimensional. Neglecting terms of order Mach number squared, we obtain

$$(\underset{\rightarrow}{F} + Q \underset{\rightarrow}{q})' \approx - k \bar{\rho} \ell \underset{\rightarrow}{q}' \tag{56}$$

$$(G - \underset{\rightarrow}{q} \cdot \underset{\rightarrow}{F})' \approx - \bar{Q} h'_s - \frac{\bar{Q}}{\gamma} p' \tag{57}$$

$$\nabla \cdot (\nabla \cdot \rho \, qq)' \approx \bar{q} \frac{d}{dZ} (\nabla \cdot q') + \frac{d}{dZ} (\bar{q} \nabla \cdot q')$$

$$+ \frac{d}{dZ} (q' \cdot e_Z \frac{d\bar{q}}{dZ}) + \nabla \cdot (q' \frac{d\bar{q}}{dZ}) \tag{58}$$

where e_Z is a unit vector in the axial direction. Note that the last term on the right-hand-side of (55) is not considered of higher order in Mach number since entropy gradients may be large due to entropy waves.

Note that

$$q = ue_Z + ve_r + we_\theta$$

The perturbations can be written as the product of a space dependent function and a time dependent function. That is

$$p' = \tilde{p} e^{\sigma t}$$

$$\underset{\rightarrow}{q}' = \underset{\rightarrow}{\tilde{q}} e^{\sigma t} \tag{59}$$

I, E, Characteristic Equation (cont.)

$$s' = \tilde{s} e^{\sigma t}$$

$$Q' = Q e^{\sigma t}$$

Substituting (56) through (59) into (55) yields

$$\frac{\sigma^2}{\gamma} \tilde{p} - \frac{1}{\gamma} \nabla^2 \tilde{p} = \sigma \tilde{Q} + k \bar{\rho}_\ell \nabla \cdot \tilde{q} + \bar{q} \frac{\partial}{\partial Z} (\nabla \cdot \tilde{q})$$

$$+ \frac{\partial}{\partial Z} (\bar{q} \nabla \cdot \tilde{q}) + \frac{\partial}{\partial Z} (\tilde{u} \frac{d\bar{q}}{dZ}) \qquad (60)$$

$$+ \nabla \cdot (\tilde{q} \frac{d\bar{q}}{dZ}) - \frac{\gamma-1}{\gamma} \sigma \bar{Q} \tilde{p} - \sigma \bar{q} \frac{\partial s}{\partial Z} \equiv I$$

Here the right-hand-side is of order Mach number so that neglecting it the result to lowest order

$$\nabla^2 \tilde{p} = \sigma^2 \tilde{p} \qquad (61)$$

To this same order the perturbation of (51) yields

$$\tilde{q} = - \frac{\nabla \tilde{p}}{\gamma \sigma} \qquad (62)$$

so that together with (61) we find to lowest order

$$\nabla \cdot \tilde{q} = - \frac{\nabla^2 p}{\gamma \sigma} = - \frac{\sigma}{\gamma} \tilde{p} \qquad (63)$$

I, E, Characteristic Equation (cont.)

This may be substituted in I in (60). The result is that with error of the order of Mach number squared we may write

$$\tilde{I} = \sigma\tilde{Q} - \frac{k\bar{\rho}_\ell\sigma}{\gamma}\tilde{p} - \frac{\sigma}{\gamma}\bar{q}\frac{\partial p}{\partial Z} - \frac{\sigma}{\gamma}\frac{\partial}{\partial Z}(\bar{\tilde{q}}\tilde{p})$$

$$+ \frac{\partial}{\partial Z}(\tilde{u}\frac{d\bar{q}}{dZ}) - \frac{\sigma}{\gamma}\tilde{p}\frac{d\bar{q}}{dZ} + \tilde{u}\frac{d^2\bar{q}}{dZ^2} \qquad (64)$$

$$- \frac{\gamma-1}{\gamma}\sigma\bar{Q}\tilde{p} - \sigma\bar{q}\frac{\partial s}{\partial Z}$$

Now the space variables will be separated by means of an eigenfunction expansion. Actually, this expansion is doubly infinite, but only the primary component (assuming there is only one which predominates) will be considered. Letting ν and h indicate the primary component,

$$\tilde{p} = P_{\nu h}(Z)\, J_\nu(s_{\nu h} r)\, e^{i\nu\theta} + - -$$

$$\tilde{u} = U_{\nu h}(Z)\, J_\nu(s_{\nu h} r)\, e^{i\nu\theta} + - -$$

$$\tilde{v} = V_{\nu h}(Z)\, \frac{dJ_\nu}{dr}(s_{\nu h} r)\, e^{i\nu\theta} + - -$$

$$\tilde{w} = W_{\nu h}(Z)\, \frac{J_\nu(s_{\nu h} r)}{r}\, e^{i\nu\theta} + - - \qquad (65)$$

$$\tilde{s} = S_{\nu h}(Z)\, J_\nu(s_{\nu h} r)\, e^{i\nu\theta} + - -$$

$$\tilde{Q} = Q_{\nu h}(Z)\, J_\nu(s_{\nu h} r)\, e^{i\nu\theta} + - -$$

$$\tilde{I} = I_{\nu h}(Z)\, J_\nu(s_{\nu h} r)\, e^{i\nu\theta} + - -$$

I, E, Characteristic Equation (cont.)

(65) and (64) yield

$$I_{\nu h} = \sigma Q_{\nu h} - \frac{k\rho_{\ell}\sigma}{\gamma} P_{\nu h} \frac{\sigma}{\gamma} \frac{dP_{\nu h}}{dZ} - \frac{\sigma}{\gamma} \frac{d}{dZ} (\bar{q} P_{\nu h})$$

$$+ \frac{d}{dZ} (U_{\nu h} \frac{d\bar{q}}{dZ}) - \frac{\rho}{\gamma} P_{\nu h} \frac{d\bar{q}}{dZ} + U_{\nu h} \frac{d^2\bar{q}}{dZ^2} \qquad (66)$$

$$- \frac{\gamma-1}{\gamma} \sigma\bar{Q} P_{\nu h} \frac{dS_{\nu h}}{dZ} - \sigma\bar{q} \frac{dS_{\nu h}}{dZ}$$

and (60) and (66) yield

$$\frac{1}{\gamma} \frac{d^2 P_{\nu h}}{dZ^2} - \left[\frac{(\sigma^2 + s_{\nu h}^2)}{\gamma}\right] P_{\nu h} = -I_{\nu h} \qquad (67)$$

$s_{\nu h}$ is the eigenvalue of the solution

$$J_{\nu}' (s_{\nu h}) = 0 \qquad (68)$$

It is convenient to write the variables as the sum of two terms: one of order unity (zero superscript) and the other of the order of the Mach number (one superscript). Omitting the νh subscript,

$$\begin{aligned} P_{\nu h} &= P^{(0)} + P^{(1)} \\ U_{\nu h} &= U^{(0)} + U^{(1)} \\ Q_{\nu h} &= Q^{(1)} \\ S_{\nu h} &= S^{(1)} \\ \sigma &= \sigma^{(0)} + \sigma^{(1)} \end{aligned} \qquad (70)$$

I, E, Characteristic Equation (cont.)

Now (66), (67), (69), and (70) yield after separation according to order in Mach number

$$\frac{1}{\gamma}\frac{d^2P^{(0)}}{dZ^2} - \left[\frac{(\sigma^{(0)})^2 + (s_{\nu h})^2}{\gamma}\right] P^{(0)} = 0 \tag{71}$$

$$\frac{1}{\gamma}\frac{d^2P^{(1)}}{dZ^2} - \left[\frac{(\sigma^{(0)})^2 + s_{\nu h}}{\gamma}\right] P^{(1)} = \frac{2\sigma^{(0)}\sigma^{(1)}}{\gamma} P^{(0)}$$

$$- \sigma^{(0)}Q^{(0)} + \frac{k\rho_\ell \sigma^{(0)}}{\gamma} P^{(0)} + \frac{\sigma^{(0)}}{\gamma}\frac{d}{dx}(\bar{q}P^{(0)}) + \frac{\sigma^{(0)}}{\gamma}\bar{q}\frac{d}{dx}P^{(0)}$$

$$+ \frac{d}{dx}\left(U^{(0)}\frac{d\bar{q}}{dx}\right) + \frac{\sigma^{(0)}}{\gamma} P^{(0)}\frac{d\bar{q}}{dx} - U^{(0)}\frac{d^2\bar{q}}{dx^2}$$

$$+ \frac{\gamma-1}{\gamma}\sigma^{(0)}\bar{Q}P^{(0)} + \sigma^{(0)}\bar{q}\frac{dS^{(1)}}{dx} \equiv f(x) \tag{72}$$

One can show from (51) that if the axial velocity disappears at the injector face the boundary conditions give

$$\frac{dP^{(0)}}{dZ} = 0 \text{ at } Z = 0 \tag{73}$$

and

$$\frac{dP^{(1)}}{dZ} = 0 \text{ at } Z = 0 \tag{74}$$

I, E, Characteristic Equation (cont.)

Similarly, assuming the nozzle admittance coefficients to be of the order of the Mach number, at the nozzle entrance Z_e, corresponding relations are

$$\frac{dP^{(0)}}{dZ} = 0 \text{ at } Z = Z_e \tag{75}$$

and

$$\frac{dP^{(1)}}{dZ} = \sigma^{(0)} \; E \; P^{(0)} \text{ at } Z = Z_e \tag{76}$$

The solution of (71) subject to (73) and (75) is

$$P^{(0)} = \cos \left[(\omega^{(0)})^2 - (s_{\nu h}{}^2) \right]^{1/2} Z \tag{77}$$

where $\omega^{(0)} = i\sigma^{(0)}$. It follows from (13) and (15) that

$$U^{(0)} = \frac{(\omega^{(0)})^2 - (s_{\nu h})^2}{\gamma \; \sigma \; (0)} \sin \sqrt{(\omega^{(0)})^2 - (s_{\nu h})^2}\, Z \tag{78}$$

In (27) and (28), $\omega^{(0)}$ is given by

$$(\omega^{(0)})^2 = (s_{\nu h})^2 + \frac{\pi^2 m^2}{Z_e{}^2}, \; m = 0, \; 1, \; 2, \; - \; - \; -$$

Now with (77) and (78) substituted into the right-hand side of (72), that equation may be solved subject to (74) and (76). The solution is straightforward but generally cumbersome except in the "pure" transverse case where $\omega^{(0)} = s_{\nu h}$. Then (72) simplifies since $U^{(0)} = 0$ and $P^{(0)} = 1$ and

I, E, Characteristic Equation (cont.)

$$\frac{1}{\gamma}\frac{d^2P^{(1)}}{dZ^2} = \frac{2i\, s_{\nu h}\, \sigma^{(1)}}{\gamma} - i\, s_{\nu h}\, Q^{(0)} + \frac{i\, s_{\nu h} k\bar{\rho}_\ell}{\gamma}$$

$$+ \frac{2i\, s_{\nu h}}{\gamma}\frac{d\bar{q}}{dZ} + (\gamma-1)\frac{i\, s_{\nu h}}{\gamma}\frac{d\bar{q}}{dZ} + i\, s_{\nu h}\,\bar{q}\,\frac{dS^{(1)}}{dZ} \qquad (72a)$$

Integration of (72a) subject to (74) and (76) yields

$$\frac{-E}{\gamma} + \frac{2\sigma^{(1)}}{\gamma} Z_e + -\int_o^{Z_e} Q^{(0)}\, dZ + \frac{k}{\gamma}\int_o^{Z_e} \bar{\rho}_\ell\, dZ$$

$$+ \frac{2q_e}{\gamma} + (\gamma-1)\frac{q_e}{\gamma} + q_e\, S^{(1)}\,(Z_e) - \int_o^{Z_e} S^{(1)}\frac{d\bar{q}}{dZ}\, dZ = 0 \qquad (79)$$

Since $S^{(1)}$ and $\frac{d\bar{q}}{dZ}$ are of order Mach number, the last two terms are of the order of the Mach number squared and may be neglected.

Noting that $\sigma^{(1)} = \lambda^{(1)} + i\omega^{(1)}$, Equation (79) can be separated into its real and imaginary parts to obtain

$$2\lambda^{(1)} Z_e = E_r + \gamma\int_o^{Z_e} Q_r^{(0)}\, dZ - k\int_o^{Z_e} \bar{\rho}_\ell\, dZ$$

$$- [2 + (\gamma-1)]\,\bar{q}_e \qquad (80)$$

$$2\omega^{(1)} Z_e = E_i + \int_o^{Z_e} Q_i^{(0)}\, dZ \qquad (81)$$

I, E, Characteristic Equation (cont.)

According to the sensitive time lag theory, we have

$$Q_r^{(0)} = \frac{d\bar{q}}{dZ}\, n\, (1 - \cos \omega\tau)$$

$$Q_i^{(0)} = \frac{d\bar{q}}{dZ}\, n \sin \omega\tau$$

p

so that (80) and (81) become

$$\frac{2\lambda^{(1)} Z_e}{\bar{q}_e} = \frac{E_r}{\bar{q}_e} + n\, (1 - \cos \omega\tau)$$

$$\frac{-k}{\bar{q}_e} \int_o^{Z_e} \bar{\rho}_\ell \, dZ - 2 + (\gamma - 1) \qquad (80a)$$

$$\frac{2\omega^{(1)} Z_e}{\bar{q}_e} = \frac{E_i}{\bar{q}_e} + n \sin \omega\tau \qquad (81a)$$

Since $\lambda^{(1)}$ is the real part of the coefficient of time in the exponential, positive $\lambda^{(1)}$ in (80) implies linear instability while negative $\lambda^{(1)}$ implies linear stability. Zero $\lambda^{(1)}$, of course, indicates neutral stability. Any term on the right-hand side of (80) which is positive must be considered as destabilizing while any term which is negative is stabilizing.

The first term on the right-hand side of (80) contains the real part of the nozzle admittance coefficient. Often, it surprisingly is positive for first tangential mode oscillations, indicating that the nozzle has a destabilizing effect for that mode. Calculations indicate that $E_r/\bar{q}_e$

I, E, Characteristic Equation (cont.)

can be of order unity in certain cases. In those cases, the effect of the nozzle is important compared to other effects to be discussed. In other cases, calculations show that this term is negligible compared to unity and has, therefore, negligible effect upon the instability (except perhaps in marginal cases). One cannot neglect the significant changes in the stability characteristics of an engine which can be achieved through modifications of the nozzle design.

The second term represents the driving mechanism provided by the combustion process (according to the sensitive time lag theory in (80) or more generally in (80)) and is, of course, destabilizing. This term has been thoroughly discussed in Section I,C and requires no further discussion here.

The third term describes the damping effect due to droplet drag. Here k is considered a constant although it actually may vary with axial position. Presently, there is no accurate way of determining k, but intuitively $k/\bar{q}_e$ is expected to be of order unity. This means that the stabilizing term due to droplet drag could be of order unity and therefore significant if a substantial amount of liquid mass exists in the chamber, i.e.,

$$\int_o^{Z_e} \bar{\rho}_\ell \, dZ \text{ is order of unity.}$$

The final term in (80) equals (γ+1) but has been written as the sum of "two" and (γ-1). The quantity "two" is traced back to the term $\nabla\cdot(\nabla\cdot\rho q\ q)'$ in Equation (55). That term is the divergence of the perturbation of the momentum flux and is nonzero only in the distributed combustion case. It is a most important stabilizing factor; only the liner can sometimes provide a larger stabilizing effect. The quantity (γ-1) is considerably smaller and is traced back to the term $(\gamma-1)\frac{\partial}{\partial t}(G-q\cdot F)'$ in (55). As mentioned after Equation (53), this can be shown to be related to the change of entropy of the gas.

I, E, Characteristic Equation (cont.)

Equation (81) gives the frequency correction due to the nozzle and combustion process. This equation is weakly coupled to (80) since frequency appears implicitly in the arguments of the nozzle admittance coefficient and explicitly in the combustion response term.

The question arises as to whether (80) and (81) apply in the limiting case of concentrated combustion. Zinn (Ref 6) considered transverse oscillations with combustion concentrated at the injector and obtained a different result. One must look carefully, however, at what was done there. When the combustion is not distributed $d\bar{q}/dZ = 0$ and from (58) one can show that, neglecting terms of the order of Mach number squared, $\nabla\cdot(\nabla\cdot\rho\ q\ q)'$ becomes zero for the transverse modes. This implies that the "two" in (80) is replaced by zero. However, the boundary condition at the injector is no longer given by (74). Through the proper boundary condition, two terms are introduced to the stability relation: one is a combustion response term equivalent to the one in (80) and the other, originating through the density variation at the injector, appears as a "unity" in the equation equivalent to (80). There is now a "unity" instead of a "two" so that according to Zinn the concentrated combustion case is considerably more unstable than the distributed case. Zinn also assumed isentropic oscillations so that the $(\gamma-1)$ term did not appear but that is beside the point to be made here.

The discrepancy lies in the fact that Zinn did not account for the change in velocity which a particle undergoes as it changes pulse. This change of velocity provides an important damping effect. Suppose in the distributed case $q_\ell = q$ so that $F = 0$. Then (56) is replaced by

$$(\vec{F} + Q\ \vec{q})' \simeq \bar{Q}\ \vec{q}' \qquad (56a)$$

I, E, Characteristic Equation (cont.)

The $\bar{Q}\ q' = \frac{d\bar{q}}{dZ}\ \underset{\rightarrow}{q'}$ now appears where it did not before. This leads to a "minus unity" appearing in the stability relation so that when combined with the "two" from the momentum flux term the result is "unity" as obtained by Zinn.

Therefore, the implication is that (80) and (81) should be used even in the concentrated case and those relations were not obtained by Zinn only because he neglected certain physical effects.

Similar interpretations could be given to the terms appearing in the stability relations for longitudinal and mixed mode oscillations which would result from the integration of (72).

I, Theory (cont.)

F. DISCUSSION OF RESTRICTIONS

This section will be concerned with the restrictions imposed by the chamber Mach number, chamber length-to-diameter ratio, and frequency of oscillation. These restrictions have been selected because they effect the region over which the analysis is applicable.

In order to obtain a solution to equations (11a) through (11i), it was necessary to express the pressure perturbation, p, in the form of a series as shown by equation (12). The restriction considered herein occurs at the outset of the analysis; therefore, it is instructive to interpret each term in the p series.

If the series is expressed in terms of the acoustic solution, i.e.,

$$p' = p_o$$

then the following restrictions are imposed: (]) the exhaust nozzle is replaced by a flat plate at the chamber exit, (2) there is no flow - no combustion - within the chamber, and (3) the injector is replaced by a flat plate. The solution of this problem results in the three-dimensional acoustic solution for a cylinder closed at both ends.

When the next term in the pressure perturbation series is included, i.e.,

$$p' = p_0 + p_1$$

the result is that p_1 modified the acoustic solution by incorporating the primary effects of the injector, combustion process, and the exhaust nozzle. However, the contribution of the gas flow between the axial position where

I, F, Discussion of Restrictions (cont.)

combustion is completed, Z_c, and the exhaust nozzle inlet, Z_e, is not considered. Equation (13b) shows that all the p_1 - effects (with the exception of the exhaust nozzle) exist only in the interval, $0 \leq Z \leq Z_c$, and only the acoustic solution exists in the interval, $Z_c \leq Z \leq Z_e$.

The work by Scala and Reardon (Refs. 7 and 2) was restricted to small combustion chamber Mach numbers. This restriction simplified the mathematics of the analysis and confined their analysis to the partial sum of the perturbation series

$$p' = p_0 + p_1$$

The acoustic solution is assumed to be of the form

$$p_o\ (A,r,\theta) = P_o\ (Z)\Psi_{\nu\eta}\ (r)\ (H_\nu\ (\theta)$$

where the variables on the right side of the equation were given by

$$p_o\ (Z) - \cosh\ \Omega\ Z$$

$$\Psi_{\nu\eta}\ (r) = J_\nu\ (S_{\nu\eta}\ r)$$

$$H_\nu\ (\theta) = \begin{cases} \cos\ \nu\theta\ , \text{ standing mode} \\ e^{-\nu\theta}, \text{ spinnning mode} \end{cases}$$

where

$$\Omega^2 = s_{\nu\eta}{}^2 - \omega^2$$

I, F, Discussion of Restrictions (cont.)

The subject restriction is concerned with the treatment of P_o (Z); consequently, in the discussion hereafter, $\Psi_{\nu\eta}(r)$ and H_ν (θ) will not be mentioned.

The restriction is made in the analysis that

$$\frac{\partial P_o}{\partial Z} = \Omega \sinh \Omega Z \leqq 0 \quad (\bar{u}_e)$$

from observations based on the nozzle admittance relationship (see Reference 2). Note that this restriction imposes the Mach number on an expression that involves only the nondimensional frequency, ω , the acoustic mode number, $s_{\nu\eta}$, and the chamber length, Z, even though the acoustic solution for P_o (Z) and $\partial P_o/\partial Z$ are explicitly independent of the chamber Mach number.

Rocket engine designers generally relate the size of an engine by the ratio of the chamber length to chamber diameter (L/D). The nondimensional length Z, is related to L/D as follows

$$Z = \frac{L_c^*}{r_c^*} = 2\,\frac{L_c^*}{D_c^*} = 2\,\frac{L}{D}$$

In practice, the frequency range of interest has been taken in the range of $\pm$ 10.0% of the acoustic mode number, i.e.,

$$\omega = \tilde{\eta}\, s_{\nu\eta}$$

where $0.90 \leq \tilde{\eta} \leq 1.10$. The reason for using a range of frequencies rather than the acoustic resonant frequency is twofold. First, the acoustic resonant frequency exists only for a closed-closed cylinder and the presence

I, F, Discussion of Restrictions (cont.)

of flow, combustion, and exhaust nozzle (i.e., system losses) shift the actual resonant frequency away from the acoustic resonant frequency. Second, the correlation of empirical instability data requires knowledge of the intersection points of adjacent modes on the instability plane.

The effect of this restriction is shown in Figure 15 which indicates the applicable frequency ranges for the first and second tangential as a function of L/D. The frequency range for which the current analysis is applicable exists between similarily coded lines. It can be seen that the region of applicability decreases significantly as the L/D ratio increases. Furthermore, the region of applicability decreases - for a given L/D - as the mode of instability is increased.

II. PROGRAM LISTING

The following pages give a listing of the computer program. The input requirements as well as the logic flow charts for this program can be found in Section V,B, Case II, Application of Results.

```
$EXECUTE       IBJOB                                                    BLOK

$IBJOB         MAP,ALTIO                                                BLOK  10

$IBFTC BLOK    LIST,M94                                                 BLOK  20
       BLOCK DATA                                                       BLOK  30
C                                                                       BLOK  40
       COMMON  /PROLOG/  LOGIK(50), SL1, SL2, EORJ                      BLOK  50
       LOGICAL  LOGIK,  SL1,  SL2,  EORJ                                BLOK  60
C                                                                       BLOK  70
       DATA  SL1, SL2  /  .FALSE.. .FALSE.  /                           BLOK  80
       END                                                              BLOK  90


$IBFTC V8050   LIST,M94                                                 ....   0
       COMMON  /PROLOG/  LOGIK(50), SL1, SL2, EORJ                      ....  10
       LOGICAL  LOGIK,  SL1,  SL2,  EORJ                                ....  20
C                                                                       ....  30
   10 CALL  CHAMBR                                                      ....  40
C                                                                       ....  50
C         RETURNS FROM MAJOR PROGRAM IF AND ONLY IF AN INJECTOR PROGRAM ....  60
C          IS TO BE CALLED... INJCTR DETERMINES WHICH, WRITES SCRATCH   ....  70
C          TAPE, AND CALLS PROPER ROUTINE.                              ....  80
C                                                                       ....  90
       CALL  INJCTR                                                     .... 100
C                                                                       .... 110
       GO TO 10                                                         .... 120
          END                                                           .... 130


$IBFTC OUT     LIST,M94                                                 OUT
       SUBROUTINE OUTASS(A,K)                                           OUT   10
       DIMENSION A(12)                                                  OUT   20
       WRITE(6,10)(A(I),I=1,K)                                          OUT   30
   10  FORMAT(1X,12A6)                                                  OUT   40
       RETURN                                                           OUT   50
       END                                                              OUT   60


$IBFTC IN      LIST,M94                                                 IN
       SUBROUTINE INASSB(A)                                             IN    10
       DIMENSION A(12)                                                  IN    20
       READ(5,10)A                                                      IN    30
   10  FORMAT(12A6)                                                     IN    40
       RETURN                                                           IN    50
       END                                                              IN    60


$IBMAP *KTRAN  50,LIST,REF,DECK,M/94,RELMOD                             *KTR
*                                                                       *KTR  10
*      KISMET TRANSFER VECTOR AS APPLIED TO IBM 7094 IBSYS    8/  /64   *KTR  20
*                                                                       *KTR  30
       ENTRY   KOVFLO                                                   *KTR  40
       ENTRY   KUNFLO                                                   *KTR  50
       ENTRY   KDATEA                                                   *KTR  60
       ENTRY   KERROR                                                   *KTR  70
       ENTRY   KFINIS                                                   *KTR  80
       ENTRY   KINDX4                                                   *KTR  90
       ENTRY   KINDX1                                                   *KTR 100
       ENTRY   KINDX2                                                   *KTR 110
       ENTRY   KOPINP                                                   *KTR 120
       ENTRY   KISORG                                                   *KTR 130
       ENTRY   KDATEZ                                                   *KTR 140
KSTCHA EQU     29                                                       *KTR 150
KPRINT EQU     10                                                       *KTR 160
KPUNCH EQU     15                                                       *KTR 170
SYSDAT EQU     65                                                       *KTR 180
KOPINP TRA     1,4                 LEFT FROM 704 DAYS OF OPTIONAL INPUT*KTR 190
KFINAL TSX     KFINIS,4                                                 *KTR 200
       TTR     KERROR              AT KFINAL+1                          *KTR 210
KOVFLO TTR     KERROR              INOPERATIVE IN THE KISMET 9 SENSE    *KTR 220
KUNFLO TTR     KERROR              INOPERATIVE IN THE KISMET 9 SENSE    *KTR 230
KINDX1 PZE                                                              *KTR 240
KINDX2 PZE                                                              *KTR 250
KINDX4 PZE                                                              *KTR 260
KDATEA BCI     2,                  NOT AVAILABLE W/OUT PROGRAMMER HELP  *KTR 270
KISORG PZE     1486,,1486          PROTECT NUCLEUS                      *KTR 280
KERROR TSX     KFINIS,4                                                 *KTR 290
KFINIS CALL    EXIT                                                     *KTR 300
*                                                                       *KTR 310
*      KDATEZ, TODAY-S DATE FOR KISMET-MAP OR FORTRAN IV PROGRAMS       *KTR 320
*                                                                       *KTR 330
KDATEZ TRA     1,4                                                      *KTR 340
       END                                                              *KTR 350
```

```
$IBMAP *AAS58                                                          *AAS0010
*  AS58K9                                                              *AAS0020
*                                                                      *AAS0030
       ENTRY   AS58                                                    *AAS0040
       ENTRY   AS138                                                   *AAS0050
KISORG EQU     1486                                                    *AAS0060
 AS138 SAVE                                                            *AAS0070
       CAL     4,4                                                     *AAS0080
       ALS     18                                                      *AAS0090
       ORA     3,4                                                     *AAS0100
       SLW     BOGUS                                                   *AAS0110
       CAL     9,4                                                     *AAS0120
       LXA     GETOUT-2,4                                              *AAS0130
       TXH     BADGUY,4,0              CHECK FOR PREVIOUS EOF          *AAS0140
       STA     GETOUT                                                  *AAS0150
       TSX     AS58,4                                                  *AAS0160
 BOGUS EQU     *                                                       *AAS0170
       PZE     **,,**                  DATA,,TCARD                     *AAS0180
       TTR     GETOUT-2                                                *AAS0190
       TTR     GETOUT-2                                                *AAS0200
       PXA     **,0                    EOF ENCOUNTERED FLAG IF ADDR UNZERO *AAS0210
       ADD     58ONE                                                   *AAS0220
GETOUT STO     **                                                      *AAS0230
       RETURN  AS138                                                   *AAS0240
BADGUY EQU     *                                                       *AAS0250
       SXA     GETOUT-2,0              RESET EOF FLAG                  *AAS0260
       TTR     KFINIS                  WRITE A NOTE....THEN FLUSH HIM  *AAS0270
EOFMES BCI     9,1READING PAST END-OF-FILE ON INPUT TAPE...JOB FLUSHED *AAS0280
AS58   CLS     1,4                                                     *AAS0290
       SXA     58IR1,1                                                 *AAS0300
       SXA     58IR2,2                                                 *AAS0310
       SXD     58IR4,4                                                 *AAS0320
AS58X4 LXD     58IR4,4                                                 *AAS0330
       CAL     1,4                                                     *AAS0340
       STA     *+5                                                     *AAS0350
       STT     *+4                                                     *AAS0360
       ARS     18                                                      *AAS0370
       STA     *+6                                                     *AAS0380
       STT     *+5                                                     *AAS0390
       PXA     **,**                                                   *AAS0400
       SBM     *-1                                                     *AAS0410
       STA     AS58D                   SETD,T FOR DATA                 *AAS0420
       STA     AS58X                                                   *AAS0430
       PXA     **,**                                                   *AAS0440
       SBM     *-1                                                     *AAS0450
       STA     AS58BZ                  SET B,T FOR                     *AAS0460
       STA     AS58B                   SET B,TAG FOR BCD HEADER        *AAS0470
       STO     AS58C2-3                SET TAPE ERROR FLAG NEG.        *AAS0480
       SBM     AS58E+3                 L(12) HEAD+12                   *AAS0490
       STA     AS58C1                                                  *AAS0500
       LXA     KOVFLO,2                                                *AAS0510
       SXA     AS58C+5,2                                               *AAS0520
       AXT     AS58Q,2                                                 *AAS0530
       SXA     KOVFLO,2                                                *AAS0540
       STZ     58YYAS+2                0 TO CARD ERROR IND.            *AAS0550
       LXA     GETOUT-2,4              EOF CHECK                       *AAS0560
       TXH     BADGUY,4,0              READING PAST EOF                *AAS0570
       LXA     AS58R,4                                                 *AAS0580
       TXH     AS58A,4,KISORG          STORAGE INTO MONITOR            *AAS0590
       CALL    OUTAS8(58BCD,7)                                         *AAS0600
       TRA     KERROR                                                  *AAS0610
 58BCD BCI     7, B,TAG TOO LOW IN MEMORY USING AS58 INPUT             *AAS0620
       BCI     2, DATA    D,T                                          *AAS0630
AS58Z  TXH     AS58A,4,0                                               *AAS0640
       TSX     OUTAS8,4                                                *AAS0650
       TRA     AS58A                                                   *AAS0660
       TTR     115                                                     *AAS0670
 AS58B PZE     **                                                      *AAS0680
       CLA     =12                                                     *AAS0690
 AS58A TSX     INAS58,4                                                *AAS0700
       TRA     58IR4                                                   *AAS0710
       TTR     115                                                     *AAS0720
AS58BZ PZE     **                                                      *AAS0730
 58IR4 TXL     *+3,,**                 NORMAL RETURN                   *AAS0740
 58ERR CLS     AS58C2-1                                                *AAS0750
       STO     AS58C2-3        ERROR FLAG                              *AAS0760
       CAL*    AS58B                                                   *AAS0770
       LRS     30                                                      *AAS0780
       SUB     AS58J                                                   *AAS0790
       TNZ     AS58C2                                                  *AAS0800
       CLA     AS58C2-2                                                *AAS0810
       LLS     30                                                      *AAS0820
AS58C  SLW*    AS58B                                                   *AAS0830
       LXD     58IR4,4                                                 *AAS0840
       LDQ     AS58C2-3                                                *AAS0850
       CAL     58YYAS+2                                                *AAS0860
 58IR2 AXT     **,2                                                    *AAS0870
       AXT     **0,1                   RESTORE TRA VECTOR              *AAS0880
       SXA     KOVFLO,1                                                *AAS0890
 58IR1 AXT     **,1                                                    *AAS0900
       TQP     *+2                                                     *AAS0910
       TZE     4,4             NORMAL OR EOF EXIT                      *AAS0920
       LXD     58IR4,4                                                 *AAS0930
       TRA     2,4             ERROR EXIT FROM AS58                    *AAS0940
58EOF  LXD     58IR4,4                                                 *AAS0950
       SXA     GETOUT-2,4              EOF IND                         *AAS0960
       TXI     AS58C+2,4,1                                             *AAS0970
       TNX     AS58C3,2,1      SKIP IF END OF CARD                     *AAS0980
AS58C1 LDQ     **0,2                                                   *AAS0990
       TXI     AS58E+1,2,500       RETURN WITH NEXT BCD WORD IN MQ     *AAS1000
 AS58P CALL    OUTAS8(58BCD+9,1)                                       *AAS1010
       CALL    OUTAS8(58BCD+1,6)                                       *AAS1020
AS58Q  AXT     0,4                     TRA HERE IF ERROR               *AAS1030
       CLA     58YYAS+2                                                *AAS1040
       ALS     1                                                       *AAS1050
       TXH     *+2,4,0                                                 *AAS1060
       ORA     58ONE                   FX1                             *AAS1070
       STO     58YYAS+2                                                *AAS1080
       ORS     58YYAS+2                                                *AAS1090
       TXL     AS58Z,0,32      TO READ NEXT CARD                       *AAS1100
AS58C3 TXL     AS58Q+1,2,0                                             *AAS1110
       LXD     *-2,1                                                   *AAS1120
       TXI     AS58C,2,-1                                              *AAS1130
 AS58J OCT     63,21                                                   *AAS1140
       OCT 3000003,63,21                                               *AAS1150
       DEC 9000000,900000,90000,9000,900,90,9,296                      *AAS1160
       DEC 8000000,800000,80000,8000,800,80,8,128                      *AAS1170
       DEC 7000000,700000,70000,7000,700,70,7,216                      *AAS1180
       DEC 6000000,600000,60000,6000,600,60,6,168                      *AAS1190
       DEC 5000000,500000,50000,5000,500,50,5,280                      *AAS1200
       DEC 4000000,400000,40000,4000,400,40,4,136                      *AAS1210
```

```
        DEC 3000000,300000,30000,3000,300,30,3,384                      *AAS1220
        DEC 2000000,200000,20000,2000,200,20,2,19968                    *AAS1230
        DEC 1000000,100000,10000                                        *AAS1240
58MIL   DEC 1000            FX1000                                      *AAS1250
58CENT  DEC 100             FX100                                       *AAS1260
58TEN   DEC 10              FX10                                        *AAS1270
58ONE   DEC 1               FX1                                         *AAS1280
        DEC 1E9,1E8,1E7,1E6,1E5,1E4,1E3,1E2,1E1                         *AAS1290
        DEC 0,48                                                        *AAS1300
        SVN   0-1,7,-1                                                  *AAS1310
AS58C2  AXT    0,1                                                      *AAS1320
        AXT    0,2                                                      *AAS1330
        STP   AS58G+3                                                   *AAS1340
        STZ   AS58Y1              ZERO FIRST NUMBER FLAG                *AAS1350
        TXI   AS58D1+1,2,13                                             *AAS1360
        LXA   *+3,2                                                     *AAS1370
        TXL    AS58P,2,KISORG     STORAGE INTO MONITOR                  *AAS1380
        TXI   *+1,2,1             BUMP STORAGE ADDR.                    *AAS1390
AS58D   STD   **0                                                       *AAS1400
        SXA   *-1,2                                                     *AAS1410
        SXA   AS58Y1,2                                                  *AAS1420
        PXD   1,0                                                       *AAS1430
        TXL   *+2,1,56                                                  *AAS1440
        SSM                                                             *AAS1450
        STO   58YYAS+1                                                  *AAS1460
        LXD   AS58F1+3,2           RELOAD                               *AAS1470
AS58D1  LDQ   58YYAS+3                                                  *AAS1480
        SXD   AS58F,0                                                   *AAS1490
        SXD   AS58V,1             SAVE IR1                              *AAS1500
        STZ   58YYAS                                                    *AAS1510
        LXD   AS58F+1,4           7 TO IR4                              *AAS1520
        SXD    AS58K,4                                                  *AAS1530
        PXD   0,0                                                       *AAS1540
AS58E   TNX   AS58C1-1,2,100      TRA IF NO EXHAUSTED                   *AAS1550
        LGL   6                                                         *AAS1560
        ALS   3                                                         *AAS1570
        PAX    12,1                                                     *AAS1580
        TXH   AS58F1,1,72                                               *AAS1590
        CAL   58YYAS                                                    *AAS1600
        TXL   AS58F2,1,0                                                *AAS1610
AS58K   TXI    *+1,1,**                                                 *AAS1620
        ADD    AS58C2-4,1                                               *AAS1630
        SLW   58YYAS                                                    *AAS1640
        TIX    AS58E-2,4,1                                              *AAS1650
        STQ   58YYAS+3                                                  *AAS1660
        ORA   58MIL-4                                                   *AAS1670
        FAD   58MIL-4                                                   *AAS1680
        LDQ   58YYAS+1                                                  *AAS1690
        LLS   8                                                         *AAS1700
        LXD   *+2,4               7 TO IR4                              *AAS1710
AS58F   TXI   *+1,4,**0                                                 *AAS1720
        TXL   *+4,4,7                                                   *AAS1730
        STO   58YYAS                                                    *AAS1740
        FMP   AS58C2-10           1E7                                   *AAS1750
        FAD   58YYAS                                                    *AAS1760
        STO   58YYAS+1                                                  *AAS1770
        LDQ   58YYAS+3                                                  *AAS1780
        SXD   AS58F,4                                                   *AAS1790
        TXL    AS58E-4,,64                                              *AAS1800
AS58F1  LXD   *-1,1                                                     *AAS1810
        CAS   58ONE+1,1                                                 *AAS1820
        TIX   *-1,1,8                                                   *AAS1830
        TXH   AS58G-2,1,8                                               *AAS1840
        TIX   *-3,1,8                                                   *AAS1850
        TXL   AS58Q,0,**0           BCD POSITION                        *AAS1860
AS58F2  ZET   AS58Y1                                                    *AAS1870
        TRA    AS58E+10                                                 *AAS1880
        AXT   56,1                                                      *AAS1890
        SXA   AS58Y1,1                                                  *AAS1900
        TXL    AS58E-2,1,16                                             *AAS1910
AS58G   STQ   58YYAS+3                                                  *AAS1920
        SXD   AS58F1+3,2                                                *AAS1930
        LXD   AS58F,2                                                   *AAS1940
        NOP   AS58X-1                                                   *AAS1950
        TXH   AS58H,4,6                                                 *AAS1960
        CLA   58YYAS                                                    *AAS1970
        ORA   58MIL-4                                                   *AAS1980
        FAD   58MIL-4                                                   *AAS1990
        FDP   AS58C2-3,4                                                *AAS2000
        CLA   58YYAS+1                                                  *AAS2010
        LRS   0                                                         *AAS2020
        STQ   58YYAS                                                    *AAS2030
        SXD   *+2,4                                                     *AAS2040
        LXD   AS58F+1,4           7                                     *AAS2050
        TNX   AS58H+1,4,**0                                             *AAS2060
        SXD   *+4,4                                                     *AAS2070
        TXL   *+3,2,0                                                   *AAS2080
        LDQ   58YYAS+1                                                  *AAS2090
        FMP   AS58C2-3,4                                                *AAS2100
        TXI   *+2,2,**0                                                 *AAS2110
AS58H   CLA   58YYAS+1                                                  *AAS2120
        FAD   58YYAS                                                    *AAS2130
        STO   58YYAS+1                                                  *AAS2140
        LXD   AS58V,4                                                   *AAS2150
        TXH   *+4,4,48                                                  *AAS2160
        TXH   AS58V+1,4,40                                              *AAS2170
        TXL   *+3,1,48                                                  *AAS2180
        TXL   AS58D+3,2,0                                               *AAS2190
        TXH   AS58D-3,1,48          TO STORE RESULT                     *AAS2200
        TXL   AS58W,1,40                                                *AAS2210
        SXD   AS58F,2                                                   *AAS2220
        SXD   *+4,2                                                     *AAS2230
        LXD   AS58F1+3,2                                                *AAS2240
        LDQ   58YYAS+3                                                  *AAS2250
AS58V   TXL   AS58D1+2,0,**0        CODE                                *AAS2260
        TNX   AS58W-1,2,**0                                             *AAS2270
        CLA   58YYAS+1                                                  *AAS2280
        TXL   *+4,2,9                                                   *AAS2290
        FDP   AS58C2-12           1E9                                   *AAS2300
        STQ   58YYAS+1                                                  *AAS2310
        TXI   *-4,2,-9                                                  *AAS2320
        TXL   *+4,2,0                                                   *AAS2330
        FDP   AS58C2-3,2                                                *AAS2340
        STQ   58YYAS+1                                                  *AAS2350
        CLA   58YYAS+1                                                  *AAS2360
        SXD   AS58W+1,0                                                 *AAS2370
        TXH   AS58D-3,1,40          STORE IF . OR - OR +                *AAS2380
AS58W   LDQ   *+7                 NEXT IS E.L.A                         *AAS2390
        SLQ   AS58G+3             SET FIXED                             *AAS2400
        SLQ   AS58V               SET POSITIVE                          *AAS2410
        TXH   AS58D1-1,1,32           NEXT CODE E                       *AAS2420
```

```
        TXH    AS58D-3,4,32        TO STORE IF PREV. CODE WAS          *AAS2430
        TXL    AS58D1-1,2,0        +, -, ., OR E                       *AAS2440
        TXL    AS58D-3,4,0        TO STORE IF DIGITS HAVE BEEN         *AAS2450
        TXL    AS58D1-1,0,497*64        READ WITH NO CODE              *AAS2460
        TXH    AS58Q,2,0              ERROR                            *AAS2470
AS58X   PXD    *+0,0                                                   *AAS2480
        TXL    *+5,4,6                                                 *AAS2490
        TXL    *+2,1,56          SET NEGATIVE                          *AAS2500
        STP    *+4                                                     *AAS2510
        LXD    AS58F1+5,2                                              *AAS2520
        TXH    AS58D1+3,1,48                                           *AAS2530
        STP    AS58G+3           SET FIXED                             *AAS2540
AS58Y   NOP    *+2                                                     *AAS2550
        SSM                                                            *AAS2560
        LDQ    58YYAS                                                  *AAS2570
        DVP    58ONE,4                                                 *AAS2580
        STQ    58YYAS                                                  *AAS2590
        LXD    AS58V,4                                                 *AAS2600
        TXL    *+13,4,32                                               *AAS2610
        LXA    58YYAS,2                                                *AAS2620
        TXH    AS58Q,2,38              ERROR                           *AAS2630
        TMI    AS58V+2                                                 *AAS2640
        LDQ    58YYAS+1                                                *AAS2650
        TXL    *+4,2,9                                                 *AAS2660
        FMP    58ONE+1                                                 *AAS2670
        STO    58YYAS+1                                                *AAS2680
        TXI    *-4,2,-9                                                *AAS2690
        TXL    AS58W-3,2,0                                             *AAS2700
        FMP    AS58C2-3,2                                              *AAS2710
        STO    58YYAS+1                                                *AAS2720
        TXL    AS58W-2,0,0                                             *AAS2730
        CLA    58YYAS                 L OR A                           *AAS2740
        ADM    AS58E-1                                                 *AAS2750
        TXL    *+2,4,24                                                *AAS2760
        ADM    AS58X                                                   *AAS2770
        STA    AS58D             SET NEW STORAGE LOCATION              *AAS2780
        TXL    AS58W,1,32                                              *AAS2790
        TXL    AS58Q,1,40              ERROR                           *AAS2800
        TRA    AS58D+3                                                 *AAS2810
AS58YI  PZE    0                                                       *AAS2820
58YYAS  EQU    COMMON                                                  *AAS2830
COMMON  BSS     50                                                     *AAS2840
ZZZZZZ  PZE                                                            *AAS2850
COMMON  CONTRL  COMMON,ZZZZZZ                                          *AAS2860
        END                                                            *AAS2870
```

```
SIBMAP *INTG   LIST,REF,DECK                                                INTG0010
*     GLAUZ - BOOLES INTEGRATION - SIMPSONS ERROR CONTROL (F,I,E,M)         INTG0020
      ENTRY   INTGR                                                         INTG0030
      ENTRY   INTGS                                                         INTG0040
INTGR SAVE    1,2,4                                                       INTG0050
      CLA*    4,4                 B                                       INTG0060
      SXA     IR4,4                                                       INTG0070
      STO     B                                                           INTG0080
      LDQ*    3,4                 A                                       INTG0090
      STQ     A                                                           INTG0100
      FSB     A                   B-A                                     INTG0110
      STO     IVAL                B-A IS INTERVAL                         INTG0120
      CLA*    6,4                 NUMBER OF INTERVALS ESTIMATED           INTG0130
      LDQ     ZERO                                                        INTG0140
      ALS     18                                                          INTG0150
      STA     IRT                                                         INTG0160
      ANA     MASK                MAKES MULTIPLE OF 4                     INTG0170
      TNZ     *+2                                                         INTG0180
      CLA     FR                  4 IN DECREMENT                          INTG0190
DBL   STD     DECA                SETS DECREMENTS AT 4P                   INTG0200
      STD     DECB                                  4P                    INTG0210
      STZ     INT                 ZERO OUT INTEGRAL AND                   INTG0220
      STZ     ERR                         ERROR SUMS                      INTG0230
      AXT     4,4                                                         INTG0240
      SXA     I1,4                PRESET IR1 AT 4                         INTG0250
      PDX     0,4                 4P TO IR4                               INTG0260
      TXI     *+1,4,1             UP TO 4P+1                              INTG0270
      SXA     I2,4                PRESET I2 TO 4P+1                       INTG0280
      ANA     MASK                MASK OFF EVERYTHING EXCEPT DECREMENT    INTG0290
      ARS     18                                                          INTG0300
      ADD     NAS                 ADD 299    FLOAT N TO GET NUMBER OF     INTG0310
      FAD     NAS                 NORMALIZE  INTERVALS                    INTG0320
      STO     XN                  FLOATED NUMBER OF INTERVALS             INTG0330
      CLA     B                                                           INTG0340
IR4   AXT     **,4                                                        INTG0350
      STO*    5,4                                                         INTG0360
      RETURN  INTGR               EXIT WITH X                             INTG0370
INTGS SAVE    1,2,4                                                       INTG0380
      SXA     IR1,1                                                       INTG0390
      SXA     IR2,2                                                       INTG0400
I1    AXT     **,1                COEFFICIENT COUNTER                     INTG0410
I2    AXT     **,2                INTERVAL COUNTER                        INTG0420
      LDQ     FRE                                                         INTG0430
      TXL     *+3,2,1                                                     INTG0440
DECA  TXH     *+2,2,**            SET AT 4P                               INTG0450
      LDQ     TABI+4,1                                                    INTG0460
      FMP*    3,4                 F                                       INTG0470
      FAD     IRT                                                         INTG0480
      STO     IRT                 NEW INTEGRAL SUM                        INTG0490
      LDQ     ONE                                                         INTG0500
      TXL     *+3,2,1                                                     INTG0510
DECB  TXH     **+2,2,**           SET AT 4P                               INTG0520
      LDQ     TABE+4,1                                                    INTG0530
      FMP*    3,4                                                         INTG0540
      FAD     ERR                                                         INTG0550
      STO     ERR                 NEW ERROR SUM                           INTG0560
      TIX     *+2,1,1             REDUCE IR1 BY 1                         INTG0570
      AXT     4,1                 RESET IR1                               INTG0580
      SXA     I1,1                STORE COEFFICIENT COUNTER               INTG0590
IR1   AXT     **,1                                                        INTG0600
      TIX     INC,2,1             OUT TO GET NEW VALUE OF X               INTG0610
      FDP     INT                 ALL THROUGH SUMMING                     INTG0620
      STO     TEMPA                                                       INTG0630
      STQ     TEMPQ                                                       INTG0640
      LDQ     TEMPA                                                       INTG0650
      CLA     TEMPQ                                                       INTG0660
      SSP                                                                 INTG0670
      SUB*    5,4                 MAXIMUM RELATIVE ERROR                  INTG0680
      TMI     FIN                 OUT IF FINISHED                         INTG0690
IRT   AXT     **,2                                                        INTG0700
      TXI     *+1,2,1                                                     INTG0710
      TXH     FIN,2,7                                                     INTG0720
      SXA     IRT,2                                                       INTG0730
      LXA     IR2,2                                                       INTG0740
      CLA     DECA                DOUBLE NUMBER                           INTG0750
      ALS     1                      OF                                   INTG0760
      TRA     DBL                    INTERVALS                            INTG0770
INC   SXA     I2,2                STORE NEW INTERVAL COUNTER              INTG0780
      TXI     *+1,2,-1            REDUCE TO NUMBER OF INTERVALS           INTG0790
      PXA     0,2                 TO ACCUMULATOR                          INTG0800
      ADD     NAS                 FLOAT                                   INTG0810
      FAD     NAS                   NUMBER                                INTG0820
      FDP     XN                  /TOTAL NUMBER INTERVALS                 INTG0830
      FMP     IVAL                                                        INTG0840
      FAD     A                   NEW X                                   INTG0850
IR2   AXT     **,2                RESTORE IR2                             INTG0860
      TRA     IR4                                                         INTG0870
FIN   CLA     INT                                                         INTG0880
      FDP     XN                  IVAL/XN=H                               INTG0890
      FMP     IVAL                                                        INTG0900
      FDP     FRF                                                         INTG0910
      STO*    4,4                 INTEGRAL                                INTG0920
      STZ*    6,4                                                         INTG0930
      CLA     DECA                NUMBER OF                               INTG0940
      ARS     18                       INTERVALS                          INTG0950
      STA*    6,4                                                         INTG0960
      LXA     IR2,2                                                       INTG0970
      RETURN  INTGS                                                       INTG0980
MASK  OCT     077774000000                                                INTG0990
FR    OCT     000004000000                                                INTG1000
NAS   OCT     233000000000                                                INTG1010
FRE   DEC     14.                                                         INTG1020
TABI  DEC     28.,64.,24.,64.                                             INTG1030
ONE   DEC     1.                                                          INTG1040
TABE  DEC     2.,-4.,6.,-4.                                               INTG1050
FRF   DEC     49.                                                         INTG1060
A     BSS     1                                                           INTG1070
B     BSS     1                                                           INTG1080
ERR   BSS     1                                                           INTG1090
INT   BSS     1                                                           INTG1100
IVAL  BSS     1                                                           INTG1110
XN    BSS     1                                                           INTG1120
TEMPA BSS     1                                                           INTG1130
TEMPQ BSS     1                                                           INTG1140
ZERO  DEC     0                                                           INTG1150
      END                                                                 INTG1160
```

```
$IBMAP *KDATE  50,LIST,REF,DECK,M/94,RELMOD                                *KDA
*                                                                          *KDA  10
*      DATE -- TODAY-S DATE IN THE FORM DD MMMM YYYY                       *KDA  20
*      CALL DATE (BCDATE), WHERE BCDATE IS 2 CELLS WHICH WILL CONTAIN      *KDA  30
*                        THE BCD FORM OF TODAY-S DATE                      *KDA  40
*                                                                          *KDA  50
       ENTRY   DATE                                                       *KDA  60
SYSDAT EQU     65                                                          *KDA  70
 DATE  TXH     0,,0                                                        *KDA  80
       SXA     DATE1,1                                                     *KDA  90
       SXA     DATE4,4                                                     *KDA 100
       LXA     DATE,1                                                      *KDA 110
       TXH     TSL,1,0                                                     *KDA 120
 PXA   PXA     1,4                     TSX ENTRY                           *KDA 130
       PAC     ,1                                                          *KDA 140
       TXI     *+1,1,1                                                     *KDA 150
       SXA     DATE,1                  BUILD RETURN ADDRESS                *KDA 160
       TRA     *+4                                                         *KDA 170
 TSL   TXI     *+1,1,-1                TSL ENTRY                           *KDA 180
       PXA     ,1                                                          *KDA 190
       PAC     ,4                      LOAD UP XR4 FOR CALL SEQ.           *KDA 200
       CAL     3,4                                                         *KDA 210
       ADD     PAX                                                         *KDA 220
       STA     D1                                                          *KDA 230
       PXA     ,0                                                          *KDA 240
       LOG     SYSDAT                  MMDDYY                              *KDA 250
       LGL     12                      MM/DDYY00                           *KDA 260
 PAX   PAX     1,1                                                         *KDA 270
       LGL     12                      00MMDD/YY0000                       *KDA 280
       ALS     24                      DD0000/YY0000                       *KDA 290
       SLW*    3,4                     DD0000/0000YY                       *KDA 300
       LGL     12                      000 YY/000000                       *KDA 310
       ORA     D19                     0019YY/000000                       *KDA 320
 D1    SLW     **                                                          *KDA 330
       TNX     *+2,1,63                                                    *KDA 340
       TXI     *+1,1,9                                                     *KDA 350
       CAL     MOTABL+1,1                                                  *KDA 360
       LGR     12                      0/BAAA/AB0000                       *KDA 370
       ORA*    3,4                     DD0000+BAAA IN 3,4 (INDIRECT)       *KDA 380
       SLW*    3,4                                                         *KDA 390
       LGL     36                      AB0000/000000                       *KDA 400
       ORA*    D1                      AB0000+19YY                         *KDA 410
       SLW*    D1                                                          *KDA 420
 DATE4 AXT     **,4                                                        *KDA 430
 DATE1 AXT     **,1                                                        *KDA 440
       TRA*    DATE                    ESCAPE                              *KDA 450
 D19   BCI     1,001900                                                    *KDA 460
       BCI     9, DEC.  NOV.  OCT.  SEPT  AUG.  JULY  JUNE   MAY  APR.    *KDA 470
       BCI     2, MAR.  FEB.                                               *KDA 480
MOTABL BCI     1, JAN.                                                     *KDA 490
       END                                                                 *KDA 500
```

```
$IBFTC *NT4    LIST,M94                                                    INT4
      SUBROUTINE INT4(X,Y,XI,YO)                                           INT4  10
      DIMENSION X(9),Y(9),XC(4),YC(4)                                      INT4  20
      EQUIVALENCE (XC(1),X1),(XC(2),X2),(XC(3),X3),(XC(4),X4),(YC(1),Y1)INT4  30
     1,(YC(2),Y2),(YC(3),Y3),(YC(4),Y4)                                    INT4  40
   10 ASSIGN 90 TO NA                                                      INT4  50
      J=2                                                                  INT4  60
      B=XI                                                                 INT4  70
   20 IF(X(J))30,40,30                                                     INT4  80
   30 GO TO NA,(90,160)                                                    INT4  90
   40 IF(Y(J))30,50,30                                                     INT4 100
   50 IF(J-2)60,60,70                                                      INT4 110
   60 YE=0.0                                                               INT4 120
      GO TO 180                                                            INT4 130
   70 ASSIGN 150 TO NB                                                     INT4 140
      J=J-1                                                                INT4 150
   80 X1=X(J)                                                              INT4 160
      X2=X(J-1)                                                            INT4 170
      X3=X(J-2)                                                            INT4 180
      Y1=Y(J)                                                              INT4 190
      Y2=Y(J-1)                                                            INT4 200
      Y3=Y(J-2)                                                            INT4 210
      GO TO NB,(150,170)                                                   INT4 220
   90 IF(X(J)-B)120,100,100                                                INT4 230
  100 IF(J-2)130,130,110                                                   INT4 240
  110 ASSIGN 160 TO NA                                                     INT4 250
  120 J=J+1                                                                INT4 260
      GO TO 20                                                             INT4 270
  130 DO 140 J=1,3                                                         INT4 280
      XC(J)=X(J)                                                           INT4 290
  140 YC(J)=Y(J)                                                           INT4 300
  150 D=X2-X1                                                              INT4 310
      A1=B-X1                                                              INT4 320
      A2=B-X2                                                              INT4 330
      YE=A1*A2/2.0/D*((Y3-Y2)/(X3-X2)-(Y2-Y1)/D)-A2/D*Y1+A1/D*Y2           INT4 340
      GO TO 180                                                            INT4 350
  160 ASSIGN 170 TO NB                                                     INT4 360
      GO TO 80                                                             INT4 370
  170 X4=X(J-3)                                                            INT4 380
      Y4=Y(J-3)                                                            INT4 390
      D=X3-X2                                                              INT4 400
      A1=B-X2                                                              INT4 410
      A2=B-X3                                                              INT4 420
      XM12=(Y2-Y1)/(X2-X1)                                                 INT4 430
      XM23=(Y3-Y2)/D                                                       INT4 440
      XM34=(Y4-Y3)/(X4-X3)                                                 INT4 450
      YE=A1*A2**2/2.0/D**2*(XM12-XM23)+A2*A1**2/2.0/D**2*(XM34-XM23)-A2*INT4 460
     1Y2/D+A1*Y3/D                                                         INT4 470
  180 YO=YE                                                                INT4 480
      RETURN                                                               INT4 490
      END                                                                  INT4 500
```

```
$IBFTC NT4D*   LIST,M94                                                  INT4D
      SUBROUTINE INT4D(X,Y,XI,YO,DY)                                     INT4D 10
      DIMENSION X(9),Y(9),XC(4),YC(4)                                    INT4D 20
      EQUIVALENCE (XC(1),X1),(XC(2),X2),(XC(3),X3),(XC(4),X4),(YC(1),Y1)INT4D 30
     1,(YC(2),Y2),(YC(3),Y3),(YC(4),Y4)                                  INT4D 40
   10 ASSIGN 90 TO NA                                                    INT4D 50
      J=2                                                                INT4D 60
      B=XI                                                               INT4D 70
   20 IF(X(J))30,40,30                                                   INT4D 80
   30 GO TO NA,(90,160)                                                  INT4D 90
   40 IF(Y(J))30,50,30                                                   INT4D100
```

```
   50 IF(J-2)60,60,70                                                   INT4D110
   60 YE=0.0                                                            INT4D120
      GO TO 180                                                         INT4D130
   70 ASSIGN 150 TO NB                                                  INT4D140
      J=J-1                                                             INT4D150
   80 X1=X(J)                                                           INT4D160
      X2=X(J-1)                                                         INT4D170
      X3=X(J-2)                                                         INT4D180
      Y1=Y(J)                                                           INT4D190
      Y2=Y(J-1)                                                         INT4D200
      Y3=Y(J-2)                                                         INT4D210
      GO TO NB,(150,170)                                                INT4D220
   90 IF(X(J)-B)120,100,100                                             INT4D230
  100 IF(J-2)130,130,110                                                INT4D240
  110 ASSIGN 160 TO NA                                                  INT4D250
  120 J=J+1                                                             INT4D260
      GO TO 20                                                          INT4D270
  130 DO 140 J=1,3                                                      INT4D280
      XC(J)=X(J)                                                        INT4D290
  140 YC(J)=Y(J)                                                        INT4D300
  150 D=X2-X1                                                           INT4D310
      A1=B-X1                                                           INT4D320
      A2=B-X2                                                           INT4D330
      XM23=(Y3-Y2)/(X3-X2)                                              INT4D340
      XM12=(Y2-Y1)/(X2-X1)                                              INT4D350
      XM2B=(XM23-XM12)/2.0/D                                            INT4D360
      YO=A1*A2*XM2B-A2*Y1/D+A1*Y2/D                                     INT4D370
      DY=XM2B*(A1+A2)+XM12                                              INT4D380
      GO TO 180                                                         INT4D390
  160 ASSIGN 170 TO NB                                                  INT4D400
      GO TO 80                                                          INT4D410
  170 X4=X(J-3)                                                         INT4D420
      Y4=Y(J-3)                                                         INT4D430
      D=X3-X2                                                           INT4D440
      A1=B-X2                                                           INT4D450
      A2=B-X3                                                           INT4D460
      XM12=(Y2-Y1)/(X2-X1)                                              INT4D470
      XM23=(Y3-Y2)/D                                                    INT4D480
      XM34=(Y4-Y3)/(X4-X3)                                              INT4D490
      AM2=A2*(XM12-XM23)                                                INT4D500
      AM1=A1*(XM34-XM23)                                                INT4D510
      YO=(A1*A2/2.0/D*(AM2+AM1)-A2*Y2+A1*Y3)/D                          INT4D520
      DY=(AM2*(2.0*A1+A2)+AM1*(2.0*A2+A1))/2.0/D**2+XM23                INT4D530
  180 RETURN                                                            INT4D540
      END                                                               INT4D550
```

```
$IBFTC PAGER   LIST,M94                                                 PAGE
      SUBROUTINE PAGE(LINES)                                            PAGE  10
C                                                                       PAGE  20
C     HEAD MOVED TO /PROLOG/ AND PAGE MODIFIED TO PRINT HEAD 29JUL 67   PAGE  30
C                                                                       PAGE  40
      COMMON  /PROLOG/  LOGIK(98), HEAD(12), SL1, SL2, EORJ             PAGE  50
      DIMENSION  TODAY (2)                                              PAGE  60
      DATA  KPG / 0 /                                                   PAGE  70
C                                                                       PAGE  80
      IF(LINES-60)20,10,10                                              PAGE  90
   10 L=2                                                               PAGE 100
      GO TO 60                                                          PAGE 110
   20 K=L+LINES                                                         PAGE 120
      IF(K-60)50,30,30                                                  PAGE 130
   30 L=K                                                               PAGE 140
   40 RETURN                                                            PAGE 150
C                                                                       PAGE 160
   50 L=LINES+2                                                         PAGE 170
   60 IF ( KPG .EQ. 0 )   CALL  DATE (TODAY)                            PAGE 180
   70 KPG = KPG + 1                                                     PAGE 190
      WRITE (6,80)  TODAY, HEAD, KPG                                    PAGE 200
   80 FORMAT ( 1H1 9X 6HDATE   2A6, 12X 12A6, 11X 5HPAGE  I5 )         PAGE 210
      GO TO 40                                                          PAGE 220
      END                                                               PAGE 230
```

```
$ORIGIN        ALODE
$INCLUDE       ABCDF
$IBFTC CHAMB   LIST,M94                                                    CHAM
      SUBROUTINE  CHAMBR                                                   CHAM  10
C                                                                          CHAM  20
C           20 SEP 67  MODIFIED FOR TABULAR INJECTOR COEFFICIENTS          CHAM  30
C                                                                          CHAM  40
      LOGICAL  LOGIK, ARUN,BRUN,CRUN,DRUN,ERUN,FRUN,GRUN,HRUN,IRUN,JRUN    CHAM  50
      LOGICAL  SL1, SL2, EORJ                                              CHAM  60
      REAL  MACH                                                           CHAM  70
      COMMON  / /                                                          CHAM  80
     1   GAM, NWI, WIT(30), AVN(30), BVN(30), CVNR(30), CVNI(30), EE,DSCCHAM  90
      COMMON  /PROLOG/  LOGIK(38), HEAD(12), SL1, SL2, EORJ                CHAM 100
      COMMON/ABCDF/ DINP,STOW                                              CHAM 110
      DIMENSION  EXTRA(100),                WC(75)                         CHAM 120
      DIMENSION DINP(4300),A(1),B(1),C(1),D(1)                             CHAM 130
      DIMENSION  X(133),Y(133),Q(134),STOW(222),STODAT(4607)               CHAM 140
      DIMENSION ZZ(205)                                                    CHAM 150
      DIMENSION G(1),DISTL(20),DISTM(20)                                   CHAM 160
      DIMENSION  AMIT(90)                                                  CHAM 170
      EQUIVALENCE ( EXTRA, DINP, STODAT )                                  CHAM 180
      EQUIVALENCE                                                          CHAM 190
     1   (LOGIK(1) , ARUN),   (LOGIK(2) , BRUN),   (LOGIK(3) , CRUN),     CHAM 200
     2   (LOGIK(4) , DRUN),   (LOGIK(5) , ERUN),   (LOGIK(6) , FRUN),     CHAM 210
     3   (LOGIK(7) , GRUN),   (LOGIK(8) , HRUN),   (LOGIK(9) , IRUN),     CHAM 220
     4   (LOGIK(10), JRUN)                                                 CHAM 230
      EQUIVALENCE (EXTRA(1),CA),(EXTRA(2),CB),(EXTRA(3),CC),(EXTRA(4),     CHAM 240
     1CD),(EXTRA(5),CE),(EXTRA(6),CF),(EXTRA(7),CG),(EXTRA(8),CH)          CHAM 250
      EQUIVALENCE (EXTRA(9),CI)                                            CHAM 260
      EQUIVALENCE (DINP(1),A),(DINP(3001),B),(DINP(3401),D),               CHAM 270
     1(DINP(3501),G),(DINP(3801),C),(EXTRA(21),WC) , (B(4),UE)             CHAM 280
      EQUIVALENCE  (DINP(601),AMIT),(DINP(2813),Q),(DINP(3901),X),         CHAM 290
     1      (DINP(3651),Y)                                                 CHAM 300
      EQUIVALENCE                                                          CHAM 310
     1  (STOW(1),ZZ), (STOW(213),YH)                                       CHAM 320
     2  ,  (STOW(214),J), (STOW(215),NE), (STOW(216),YL), (STOW(217),K1)CHAM 330
     3  ,  (STOW(218),N), (STOW(219),KER), (STOW(220),XH)                  CHAM 340
     4  ,  (STOW(221),KQUAD), (STOW(222),XL)                              CHAM 350
     5   ,   (EXTRA(51), DISTL), (EXTRA(71), DISTM )                       CHAM 360
     6   ,  (EXTRA(10),CJ), (EXTRA(21),SNH ), (EXTRA(12), MACH )           CHAM 370
     7   ,   (DINP(107),U1BAR)                                             CHAM 380
C                                                                          CHAM 390
C*************************************************************************CHAM 400
C                                                                          CHAM 410
   10 FORMAT(1H0,60H     A     B     C     D     E     F     G     H      CHAM 420
     1 /     J    // 3X,(10F6.0))                                         CHAM 430
   20 FORMAT(///,9X,108H********************** THE FOLLOWING MAIN CONTCHAM 440
     1ROL DATA WILL BE USED IN THIS CASE **********************  ,///,CHAM 450
     245X,33HRATIO OF SPECIFIC HEAT (GAMMA) = ,F7.4,//,45X,22HDESIRED MACHAM 460
     3CH NUMBER = ,E12.5,26H (=0 IF BEING CALCULATED) //45X         17HCHCHAM 470
     5AMBER RADIUS = ,F7.3, 9H (INCHES),//,45X,17HCHAMBER LENGTH = ,F7.3CHAM 480
     6, 9H (INCHES),//,45X, 17HSPEED OF SOUND = ,F10.3,  9H (FT/SEC),//,CHAM 490
     745X, 27HCHAMBER MODE DESCRIPTION = ,F8.5, 28H (=0 FOR LONGITUDINALCHAM 500
     8 MODES),/,)                                                         CHAM 510
   30 FORMAT(///,33X,48H********** CHAMBER FREQUENCIES (WC) **********  CHAM 520
     1   ,//,)                                                           CHAM 530
   40 FORMAT(5F20.5,/ )                                                   CHAM 540
   50 FORMAT(30X, 64H***** MACH DISTRIBUTION IN CHAMBER AS A FUNCTION OFCHAM 550
     1 LENGTH #####,//,11X,7HCHAMBER,15X,4HMACH,14X,7HCHAMBER,15X,4HMACHCHAM 560
     2,14X,7HCHAMBER,15X,4HMACH,/,12X,6HLENGTH,11X,12HDISTRIBUTION,11X, CHAM 570
     36HLENGTH,11X,12HDISTRIBUTION,11X,6HLENGTH,11X,12HDISTRIBUTION,/,) CHAM 580
   60 FORMAT(6(10X,F10.5))                                               CHAM 590
C*************************************************************************CHAM 600
C*************************************************************************CHAM 610
C                                                                          CHAM 620
      IF ( SL2 )              GO TO 170                                    CHAM 630
C                                                                          CHAM 640
      SL2 = .TRUE.                                                         CHAM 650
      DO 70 I = 1, 4300                                                    CHAM 660
   70    DINP (I) = 0.0                                                    CHAM 670
      GO TO 110                                                            CHAM 680
C                                                                          CHAM 690
C*************************************************************************CHAM 700
C                                                                          CHAM 710
   80 WRITE (6,100)   NE                                                   CHAM 720
   90 CALL EXIT                                                            CHAM 730
  100 FORMAT (1H010X17HINPUT ERROR, NE = I3, 19H, HENCE TERMINATION )      CHAM 740
C                                                                          CHAM 750
C*************************************************************************CHAM 760
C*************************************************************************CHAM 770
C                                                                          CHAM 780
  110 KER = 0                                                              CHAM 790
      CALL  DVCHK  (KCHK)                                                  CHAM 800
C                                                                          CHAM 810
      DO 120 I = 1, 10                                                     CHAM 820
  120    DINP(I) = 0.0                                                     CHAM 830
      CALL  AS138  ( DINP(1), HEAD(1), NE )                                CHAM 840
      IF ( NE .NE. 1 )   GO TO 80                                          CHAM 850
      ARUN = CA .NE. 0.0                                                   CHAM 860
      BRUN = CB .NE. 0.0                                                   CHAM 870
      CRUN = CC .NE. 0.0                                                   CHAM 880
      DRUN = CD .NE. 0.0                                                   CHAM 890
      ERUN = CE .NE. 0.0                                                   CHAM 900
      FRUN = CF .NE. 0.0                                                   CHAM 910
      IRUN = CI .NE. 0.0                                                   CHAM 920
      JRUN = CJ .NE. 0.0                                                   CHAM 930
     0GRUN =       DINP(22) .LE. 0.0                                       CHAM 940
     1       .AND. ( ARUN .OR. BRUN .OR. CRUN .OR. IRUN )                  CHAM 950
C                                                                          CHAM 960
C     PRINT NEW MAIN CONTROL DATA                                          CHAM 970
C*************************************************************************CHAM 980
      CALL  PAGE  ( 60 )                                                   CHAM 990
      WRITE (6,10)  (DINP(I), I=1,10)                                      CHAM1000
      WRITE (6,20)  DINP(11), MACH, DINP(14), DINP(15), DINP(16), SNH      CHAM1010
C*************************************************************************CHAM1020
C     ARE FREQUENCIES TO BE CALCULATED... IF SO, CALCULATE AND PRINT.      CHAM1030
C*************************************************************************CHAM1040
      IF ( .NOT. GRUN )          GO TO 130                                 CHAM1050
      CALL 'GENMEG  ( WC(1) )                                              CHAM1060
      IF ( BRUN .OR. ARUN )              CRUN = .TRUE.                     CHAM1070
      IF ( CRUN )      CC = CC + 11.0                                      CHAM1080
  130 JOMEGA=ABS(EXTRA(22))+22.0001                                        CHAM1090
      WRITE (6,30)                                                         CHAM1100
      WRITE (6,40)(EXTRA(I),I=23,JOMEGA)                                   CHAM1110
      WRITE (6,50)                                                         CHAM1120
      WRITE (6,60)( DISTL(I), DISTM(I), DISTL(I+7),          DISTM(I+7)CHAM1130
     1, DISTL(I+14), DISTM(I+14), I=1,6 ), DISTL(7),         DISTM(7), CHAM1140
     2DISTL(14), DISTM(14)                                               CHAM1150
C*************************************************************************CHAM1160
C                                                                          CHAM1170
      EORJ = ERUN .OR. JRUN .OR. IRUN                                      CHAM1180
```

```
      IF ( CRUN .OR. EORJ )   CALL  PAGE  ( 60 )                        CHAM1190
  140 IF ( .NOT. EORJ )        GO TO 200                                  CHAM1200
      WRITE (14)      STODAT                                             CHAM1210
      BACKSPACE  14                                                      CHAM1220
      EE  = CE                                                           CHAM1230
      DSC = CI                                                           CHAM1240
      GAM = DINP(11)                                                     CHAM1250
      IF ( .NOT. IRUN )      GO TO 160                                   CHAM1260
      NWI = ( JOMEGA-22 )/2 +1                                           CHAM1270
      DO 150 I = 1, NWI                                                  CHAM1280
  150    WIT(I) = DINP( 2*I+21 )                                         CHAM1290
      WIT(NWI) = DINP( JOMEGA )                                          CHAM1300
C                                                                        CHAM1310
  160 RETURN                                                             CHAM1320
C     ******                                                             CHAM1330
C           PROGRAM RETURNS IF AND ONLY IF INJECTOR PROGRAM IS TO BE RUN CHAM1340
C                                                                        CHAM1350
C*Q*********************************************************************CHAM1360
C*Q*********************************************************************CHAM1370
C                                                                        CHAM1380
C                                                                        CHAM1390
  170 READ (14)  STODAT                                                  CHAM1400
      BACKSPACE  14                                                      CHAM1410
      IF ( .NOT. ERUN )       GO TO 200                                  CHAM1420
C                                                                        CHAM1430
      DINP(3408) = NWI                                                   CHAM1440
      DO 180 I = 1, NWI                                                  CHAM1450
         DINP(I+4522) = WIT(I)                                           CHAM1460
         DINP(I+4539) = AVN (I)                                          CHAM1470
         DINP(I+4556) = BVN (I)                                          CHAM1480
         DINP(I+4573) = CVNR(I)                                          CHAM1490
  180    DINP(I+4590) = CVNI(I)                                          CHAM1500
      DO 190 I = NWI, 84, 17                                             CHAM1510
  190    DINP(I+4529) = 0.0                                              CHAM1520
C                                                                        CHAM1530
C*********************************************************************** CHAM1540
C                                                                        CHAM1550
  200 WC(2) = ABS( WC(2) )                                               CHAM1560
C*Q*********************************************************************CHAM1570
C     FIX NUMBER OF FREQUENCIES AND TEST DESIRE FOR INTERNAL C FLAG      CHAM1580
C*********************************************************************** CHAM1590
  210 NOMEG=WC(2)+.0001                                                  CHAM1600
      IF(EXTRA(12))250,220,230                                           CHAM1610
  220 DINP(3802)=3.0                                                     CHAM1620
      GO TO 240                                                          CHAM1630
  230 U1BAR = MACH                                                       CHAM1640
      UE = MACH                                                          CHAM1650
  240 IF ( .NOT. CRUN )              GO TO 990                           CHAM1660
C*********************************************************************** CHAM1670
C     SET UP DATA FOR PROGRAM  C.                                        CHAM1680
C*********************************************************************** CHAM1690
  250 DINP(3801)=EXTRA(11)                                               CHAM1700
      NHMAF = NOMEG/2 + 1                                                CHAM1710
      ZZ(1)=EXTRA(14)                                                    CHAM1720
      ZZ(2)=EXTRA(15)                                                    CHAM1730
      ZZ(3)=EXTRA(16)                                                    CHAM1740
       DINP(3805) = EXTRA(14)                                            CHAM1750
      DINP(3803)=NHMAF                                                   CHAM1760
      IF ( DINP(3809) .EQ. 0.0 )         DINP(3809) = 101.0              CHAM1770
      K = 0                                                              CHAM1780
      ZAVE=((EXTRA(11)+1.0)/2.0)*SQRT(DINP(3804)*DINP(3807))             CHAM1790
      IF(EXTRA(21))270,260,270                                           CHAM1800
  260 SNOZ = 0.0                                                         CHAM1810
C*********************************************************************** CHAM1820
C     USING HALF OF CHAMBER FREQUENCIES, CALCULATE NOZZLE FREQUENCIES    CHAM1830
C       FOR USE IN PROG C.                                               CHAM1840
C*********************************************************************** CHAM1850
      RORL = EXTRA(15)                                                   CHAM1860
      GO TO 280                                                          CHAM1870
  270 RORL = EXTRA(14)                                                   CHAM1880
      GRAD = SQRT((2.0/(EXTRA(11)+1.0))*(DINP(3804)/DINP(3807)))         CHAM1890
      SNOZ = SNH/GRAD                                                    CHAM1900
  280 DO 290 I=1,NHMAF                                                   CHAM1910
      KR=(2*I)+1                                                         CHAM1920
      NN=4210+K                                                          CHAM1930
      DINP(NN) = ZAVE*WC(KR)/RORL                                        CHAM1940
      DINP(NN+1) = SNOZ                                                  CHAM1950
      DINP(NN+2) = MACH                                                  CHAM1960
      K=K+3                                                              CHAM1970
  290 CONTINUE                                                           CHAM1980
      DINP(NN)=ZAVE*(WC(NOMEG+2)/EXTRA(14))                              CHAM1990
  300 CALL CCC(C(1),ZZ(1),WC(1),CC,KER)                                  CHAM2000
C     SET UP NOZZ ADM FOR A,B                                            CHAM2010
      IF(KER) 310,330,310                                                CHAM2020
  310 WRITE (6,320)                                                      CHAM2030
  320 FORMAT (1H0 30X39H ERROR PROGRAM C.  ALL CASES TERMINATED )        CHAM2040
      CALL CORE(C(1),420,CC)                                             CHAM2050
      GO TO 90                                                           CHAM2060
  330 IF ( .NOT. ARUN )          GO TO 360                               CHAM2070
C*********************************************************************** CHAM2080
C     MOVE OUTPUT FROM C INTO INPUT BLOCK TO A                           CHAM2090
C*********************************************************************** CHAM2100
  340 NP = C(3)                                                          CHAM2110
      IWO = 0                                                            CHAM2120
      DO 350 I = 1, NP                                                   CHAM2130
         IWO = IWO + 2                                                   CHAM2140
         AMIT(I    ) = ZZ(IWO    )                                       CHAM2150
         AMIT(I+30) = ZZ(IWO+  1)                                        CHAM2160
         AMIT(I+60) = ZZ(IWO+101)                                        CHAM2170
  350    CONTINUE                                                        CHAM2180
C                    ZEROES TO END TABLES                                CHAM2190
      AMIT(NP+ 1) = 0.0                                                  CHAM2200
      AMIT(NP+31) = 0.0                                                  CHAM2210
      AMIT(NP+61) = 0.0                                                  CHAM2220
      IF ( MACH .LE. 0.0 )   U1BAR = ZZ(205)                             CHAM2230
      GO TO 410                                                          CHAM2240
C                                                                        CHAM2250
  360 IF ( .NOT. BRUN .AND. SNH .EQ. 0.0 )     GO TO 940                 CHAM2260
C*********************************************************************** CHAM2270
C     MOVE OUTPUT FROM PROG C INTO INPUT BLOCK FOR PROG B.               CHAM2280
C*********************************************************************** CHAM2290
  370 DO 380 I=18,200                                                    CHAM2300
  380 B(I)=ZZ(I)                                                         CHAM2310
      B(4)=ZZ(205)                                                       CHAM2320
C                                                                        CHAM2330
  390 CONTINUE                                                           CHAM2340
      HRUN = (CH.GT. 0.0) .OR. BRUN .AND.(UE.GE.0.1) .AND.(CH.EQ.0.0)    CHAM2350
C     NOZZLE ADMITTANCE IS INPUT TO PROGS A, B.                          CHAM2360
C*********************************************************************** CHAM2370
C                                                                        CHAM2380
  400 IF ( .NOT. ARUN )            GO TO 490                             CHAM2390
```

```
C                                                                       CHAM2400
  410 CALL  LONGL                                                       CHAM2410
C                                                                       CHAM2420
      IF(KER)420,440,420                                                CHAM2430
  420 WRITE (6,430)                                                     CHAM2440
  430 FORMAT(1H0,40X,18H ERROR PROGRAM A  )                             CHAM2450
      CALL  CORE  ( A(1), 700, CA )                                     CHAM2460
  440 CONTINUE                                                          CHAM2470
      GO TO 110                                                         CHAM2480
C*********************************************************************  CHAM2490
C     SET UP MAIN CONTROL DATA FOR USE IN B                             CHAM2500
C*********************************************************************  CHAM2510
  450 IF ( .NOT. BRUN )         GO TO 530                               CHAM2520
      B(1)=WC(1)                                                        CHAM2530
      B(2)=EXTRA(15)/EXTRA(14)                                          CHAM2540
      B(3)=EXTRA(11)                                                    CHAM2550
      B(5)=EXTRA(16)                                                    CHAM2560
      B(6) = DINP(17)                                                   CHAM2570
      B(7) = DINP(18)                                                   CHAM2580
      B(8) = DINP(19)                                                   CHAM2590
      B(19)=WC(2)                                                       CHAM2600
      DO 460 I=1,NOMEG                                                  CHAM2610
      B(I+169)=WC(I+2)                                                  CHAM2620
  460 CONTINUE                                                          CHAM2630
      B(200) = DISTL(1) / DINP(14)                                      CHAM2640
      B(220) = DISTM(1)                                                 CHAM2650
      B(17) = 1.0                                                       CHAM2660
      DO 480 I = 2, 20                                                  CHAM2670
      IF(DISTM(I))490,490,470                                           CHAM2680
  470 B(I+199)=DISTL(I)/EXTRA(14)                                       CHAM2690
      B(I+219)=DISTM(I)                                                 CHAM2700
      B(17)=B(17)+1.0                                                   CHAM2710
  480 CONTINUE                                                          CHAM2720
  490 CONTINUE                                                          CHAM2730
      CALL  TRANS  ( B, X, CB, KER )                                    CHAM2740
      DO 500 I = 9, 100                                                 CHAM2750
  500    D(I) = X(I)                                                    CHAM2760
      IF(KER)530,510,530                                                CHAM2770
  510 WRITE (6,520)                                                     CHAM2780
  520 FORMAT (1H0,40X,18H ERROR PROGRAM B  )                            CHAM2790
      CALL CORE(B(1),400,CB)                                            CHAM2800
      GO TO 110                                                         CHAM2810
C*********************************************************************  CHAM2820
  530 IF ( .NOT. DRUN )       GO TO 620                                 CHAM2830
  540 DO 550 I=1,8                                                      CHAM2840
      X(I)=D(I)                                                         CHAM2850
  550 CONTINUE                                                          CHAM2860
  560 X(5)=EXTRA(11)                                                    CHAM2870
      DO 570 I = 9, 100                                                 CHAM2880
  570    X(I) = D(I)                                                    CHAM2890
      CALL  DDD  ( X(1), Y(1), CD, KER, ERR )                           CHAM2900
      IF ( ERR )                  110,580,580                           CHAM2910
  580 IF ( KER )                  610,590,610                           CHAM2920
  590 WRITE (6,600)                                                     CHAM2930
  600 FORMAT (1H0,40X,18H ERROR PROGRAM D  )                            CHAM2940
      CALL CORE(X(1),100,CD)                                            CHAM2950
      GO TO 110                                                         CHAM2960
  610 CONTINUE                                                          CHAM2970
  620 IF ( .NOT. FRUN )       GO TO 670                                 CHAM2980
C*********************************************************************  CHAM2990
C     SET UP DATA FOR PROG F    (N, TAU )                               CHAM3000
C*********************************************************************  CHAM3010
  630 Y(1)=EXTRA(14)                                                    CHAM3020
      Q(101) = EXTRA(16)/Y(1) * 12.0/6.2831853                          CHAM3030
  640 Y(2)=EXTRA(16)                                                    CHAM3040
      CALL  FFF  ( Y(1), Q(1), CF, KER, WC(1) )                         CHAM3050
      IF ( KER )                  670,650,670                           CHAM3060
  650 WRITE (6,660)                                                     CHAM3070
  660 FORMAT (1H0,40X,18H ERROR PROGRAM F  )                            CHAM3080
      CALL CORE(Y(1),100,CF)                                            CHAM3090
  670 GO TO 110                                                         CHAM3100
C                                                                       CHAM3110
C                                                                       CHAM3120
C*********************************************************************  CHAM3130
C*********************************************************************  CHAM3140
C*********************************************************************  CHAM3150
      END                                                               CHAM3160
```

```
$IBFTC WGEN    LIST,M94                                                 WGEN
      SUBROUTINE GENMEG(W)                                              WGEN  10
C                                                                       WGEN  20
C*********************************************************************  WGEN  30
      DIMENSION W(1)                                                    WGEN  40
C                                                                       WGEN  50
C     LONGITUDINAL WILL HAVE NEG SNH WHICH WILL BE SET TO ZERO BEFOR RETURWGEN  60
C     IF SNH 0 LONGITIDUNIAL AND GENERATE + OR - 10 PERCENT OF PIE      WGEN  70
C*********************************************************************  WGEN  80
      IF(W(1))40,50,10                                                  WGEN  90
C*********************************************************************  WGEN 100
C     FOR TRANSVERSE GENERATE 10 VALUES AROUND SNH 9 PERCENT BELOW AND  WGEN 110
C     11 PERCENT ABOVE                                                  WGEN 120
C*********************************************************************  WGEN 130
   10 SNH=W(1)                                                          WGEN 140
   20 DELMEG=.1*SNH                                                     WGEN 150
      W(3)=SNH-DELMEG                                                   WGEN 160
      DELMEG=DELMEG/5.0                                                 WGEN 170
      W(3)=W(3)+DELMEG                                                  WGEN 180
      DO 30 I=4,12                                                      WGEN 190
      W(I)=W(I-1)+DELMEG                                                WGEN 200
   30 CONTINUE                                                          WGEN 210
C*********************************************************************  WGEN 220
C  NEGITIVE 10 INDICATES TO PROGRAM THAT FREQUENCES ARE GENERATED INTERNWGEN 230
C*********************************************************************  WGEN 240
      W(2)=-10.0                                                        WGEN 250
      RETURN                                                            WGEN 260
C*********************************************************************  WGEN 270
C     NEG GENERATE + OR - 10 PERCENT OF POSITIVE INITIAL GUESS          WGEN 280
C*********************************************************************  WGEN 290
   40 SNH=-W(1)                                                         WGEN 300
      W(1)=0.0                                                          WGEN 310
      GO TO 20                                                          WGEN 320
   50 SNH=3.141592                                                      WGEN 330
      GO TO 20                                                          WGEN 340
      END                                                               WGEN 350
```

```
$ORIGIN        BLODE                                                          HYMN
$IBFTC HYMN    LIST,M94                                                       HYMN  10
      SUBROUTINE  TRANS  ( BIN, XOUT, CB, KER )                              HYMN  20
C                                                                            HYMN  30
C     CALCULATES COMBUSTION PARAMETERS  HR, HI                               HYMN  40
C        PROGRAM BY  LW VERNON  FROM  11MAY67 ANALYSIS OF  AJ SMITH, JR      HYMN  50
C           INCORPORATES CORRECTIONS TO ANALYSIS THRU  1 JUN 67              HYMN  60
C           BOOLE INTEGRATION AS OF  12 JUNE 67                              HYMN  70
C           RHO, RHOL CONVENTIONS CORRECTED  22JUN 67                        HYMN  80
C           20 SEP 67  MODIFIED FOR TABULAR INJECTOR COEFFICIENTS            HYMN  90
C                                                                            HYMN 100
C*************************************************************************** HYMN 110
C                                                                            HYMN 120
      REAL  IAR, IAI, IBR, IBI                                               HYMN 130
      LOGICAL  LOGIK, HRUN, CKOUT, SIMPL, KNOT, LIMIT, TABLR                 HYMN 140
C                                                                            HYMN 150
      COMMON  /PROLOG/  LOGIK(38), HEAD(12), SL1, SL2, EORJ                  HYMN 160
      COMMON  /ABCDF /  DIN (4300)                                           HYMN 170
     1   , SPACE(222), WIT(17), AVN(17), BVN(17), CVNR(17), CVNI(17)         HYMN 180
      DIMENSION          B   ( 240 ) ,  GS    (  6, 102 ) ,                 HYMN 190
     1   ZZ   ( 102 ) ,  STAB ( 102 ) ,  GL    ( 12, 3 )   ,                 HYMN 200
     2   U    ( 102 ) ,  CTAB ( 102 ) ,  SLAM  ( 12 )      ,                 HYMN 210
     3   DU   ( 102 ) ,  D2U  ( 102 ) ,  ZAP   ( 12 )      ,                 HYMN 220
     4   UL   ( 102 ) ,  DUL  ( 102 ) ,  G     ( 12 )      ,                 HYMN 230
     5   RHO  ( 102 ) ,  DRHO ( 102 ) ,  GLD   ( 12 )      ,                 HYMN 240
     6   RHOL ( 102 ) ,  DROL ( 102 ) ,  ZING  (  6 )      ,                 HYMN 250
     7   QBAR ( 102 ) ,  DQ   ( 102 ) ,  SIMP  (  6 )      ,                 HYMN 260
     8   ZIP3 ( 102 ) ,  V1   ( 102 ) ,  ERRZ  (  6 )      ,                 HYMN 270
     9   ZIP5 ( 102 ) ,  V2   ( 102 ) ,  ZF    (  6 )                       HYMN 280
      DIMENSION                                                              HYMN 290
     1   THR  (  30 ) ,  THI  (  30 ) ,  THTR (  30 ) ,  THTI (  30 )       HYMN 300
     0DIMENSION          AL   (  6 ) ,  DFEK  (  4 )      ,                 HYMN 310
     1   BIN  ( 240 ) ,  XOUT ( 100 ) ,  WC    ( 28 )      ,                 HYMN 320
     2   WET  (  30 ) ,  ERT  (  30 ) ,  EIT   ( 30 )      ,                 HYMN 330
     3   ZDIST(  20 ) ,  CRT  (  30 ) ,  CIT   ( 30 )      ,                 HYMN 340
     4   DISTM(  20 )                                                        HYMN 350
      EQUIVALENCE                                                            HYMN 360
     1   ( HRUN , LOGIK(  8)),( CKOUT, LOGIK(13)),( SIMPL, LOGIK(14)),       HYMN 370
     2   ( KNOT , LOGIK(15)),( LIMIT, LOGIK(16)),( TABLR, LOGIK(17))         HYMN 380
      EQUIVALENCE                                                            HYMN 390
     1   ( B(1) , SNH   ),( B( 10) , ZINC  ),( DIN( 14) , RCH   ),          HYMN 400
     2   ( B(2) , ZE    ),( B( 18) , XNE   ),( UL(1)    , ULO  ),          HYMN 410
     3   ( B(3) , GAM   ),( B( 19) , XNW   ),( RHOL(1)  , RHOLO ),          HYMN 420
     4   ( B(4) , UE    ),( B(170) , WC    ),( B(20)    , WET  ),          HYMN 430
     5   ( B(5) , SOUND ),( B(200) , ZDIST ),( B(90)    , ERT  ),          HYMN 440
     6   ( B(6) , ULM   ),( B(220) , DISTM ),( B(80)    , EIT  ),          HYMN 450
     7   ( B(7) , XK    ),( B(110) , CRT   ),                               HYMN 460
     8   ( B(8) , XCMPL ),( B(140) , CIT   )                                HYMN 470
      EQUIVALENCE                                                            HYMN 480
     1   ( DIN(3406), RLON ),( DIN(3407), TLON )                            HYMN 490
      EQUIVALENCE                                                            HYMN 500
     1   ( A1R  , AL  ( 1) ),( A2R  , AL  ( 3) ),( A4R  , AL  ( 5) ),       HYMN 510
     2   ( A1I  , AL  ( 2) ),( A2I  , AL  ( 4) ),( A4I  , AL  ( 6) ),       HYMN 520
     3   ( G20R , SLAM( 9) ),( DG20R , SLAM(10) ),                          HYMN 530
     4   ( G20I , SLAM(11) ),( DG20I , SLAM(12) )                           HYMN 540
C*************************************************************************** HYMN 550
C                                                                            HYMN 560
   10 FORMAT ( / 65H TRANSVERSE STABILITY PROGRAM,,, CALCULATES  HR, HI     HYMN 570
     1 OR  HTR, HTI )                                                        HYMN 580
   20 FORMAT ( // 11H INPUT DATA// 9X9HSNH12X2HZE10X5HGAMMA9X2HUE9X         HYMN 590
     1   16HSOUND (FT/SEC) 2X13H ULM (FT/SEC) 5X 9HXK (DRAG)4X11HXCOMPL     HYMN 600
     2(IN)  //    F15.8, F14.8, F12.5, F14.8, F16.2, 2X 9F15.6   //         HYMN 610
     3 5X10HINCREMENTS 8X4HLR/N 11X4HLT/N / 9XF8.1, 2F19.7 // )              HYMN 620
   30 FORMAT ( // 29H NOZZLE ADMITTANCES INPUT//  15X6HOMEGA(CH) 12X        HYMN 630
     1   3HERT 17X3HEIT 17X3HCRT 17X3HCIT // )                             HYMN 640
   40 FORMAT ( ////22H CALCULATED RESULTS,,, 10X 29HFIRST-ORDER SOLN ( UHYMN 650
     1NIF INJ ) 15X21HSECOND-ORDER SOLUTION // 17X5HOMEGA 12X6HH REAL      HYMN 660
     2 14X6HH IMAG 13X7HHT REAL 13X7HHT IMAG  )                            HYMN 670
   50 FORMAT ( 9XF15.7,2E20.8 )                                            HYMN 680
   60 FORMAT ( 9XF15.7,4E20.8 )                                            HYMN 690
   70 FORMAT ( // 31H INJECTOR COEFFICIENTS INPUT,,, // )                   HYMN 700
   80 FORMAT ( 11X3HANH 17X3HBNH 16X6HCNH RE 14X6HCNH IN / 4E20.8 )        HYMN 710
   90 FORMAT (10X5HOMEGA16X3HANH17X3HBNH16X6HCNH RE14X6HCNH IN/(5E20.8))HYMN 720
  100 FORMAT ( 12HOINTEGRALS   6E18.8 )                                    HYMN 730
  110 FORMAT ( 6H ERROR 6X6E18.8 )                                         HYMN 740
  120 FORMAT ( 29H0DUMP OF TABULAR FUNCTIONS,,, // 6X2HZZ12X1HU11X2HDU     HYMN 750
     1   11X2HUL11X3HRHO9X4HRHOL9X4HQBAR9X4HZIP39X4HZIP5 // (1H 9E13.5))HYMN 760
  130 FORMAT ( 18H0TABLES FOR MIMACH//6X2HZZ11X3HDZU11X3HDUL9X4HDRHO9X     HYMN 770
     1 4HDROL10X2HDQ11X2HV111X2HV2//)                                      HYMN 780
  140 FORMAT ( 1H 8E13.5 )                                                 HYMN 790
  150 FORMAT (/10XIHW16X3HIAR15X3HIAI15X3HIBR15X3HIBI14X5HERCON13X5HEICOHYMN 800
     1N/8X4HG20R14X4HG21R14X5HDG20R13X5HDG21R14X3HM1R15X3HM2R15X2HCR     HYMN 810
     2 /8X4HG20I14X4HG21I14X5HDG20I13X5HDG21I14X3HM1I15X3HM2I15X2HCI//) HYMN 820
  160 FORMAT ( 7E18.8 )                                                    HYMN 830
C                                                                          HYMN 840
C*************************************************************************** HYMN 850
C*************************************************************************** HYMN 860
      HRUN = DIN(8) .GE. 0.0                                               HYMN 870
      CALL  DVCHK  ( KCHK )                                                HYMN 880
      NWI = DIN(3408) + 0.01                                               HYMN 890
      TABLR = NWI .GE. 3                                                   HYMN 900
      DO 170 I = 1, 240                                                    HYMN 910
  170    B(I) = BIN(I)                                                     HYMN 920
  180 IF ( CB-10.0 )          220,190,190                                  HYMN 930
  190 CALL  PAGE  (  70 )                                                  HYMN 940
      KOUT = 2                                                             HYMN 950
      NET = XNE                                                            HYMN 960
      WRITE (6,10)                                                         HYMN 970
      IF ( CB-100.0 )         220,200,200                                  HYMN 980
  200 WRITE (6,20)  ( B(I), I = 1, 8 ),  ZINC, RLON, TLON                  HYMN 990
      WRITE (6,30)                                                         HYMN1000
      WRITE (6,60)  ( WET(I), ERT(I),EIT(I), CRT(I),CIT(I), I=1,NET )      HYMN1010
      CKOUT = ( CB .GT. 200.0 )                                            HYMN1020
      IF ( .NOT. HRUN )       GO TO 220                                    HYMN1030
      WRITE (6,70)                                                         HYMN1040
      IF ( TABLR )            GO TO 210                                    HYMN1050
      WRITE (6,80)    AVN(1), BVN(1), CVNR(1), CVNI(1)                     HYMN1060
      GO TO 220                                                            HYMN1070
  210 WRITE (6,90)  ( WIT(I), AVN(I), BVN(I), CVNR(I), CVNI(I),            HYMN1080
     1                I = 1, NWI  )                                       HYMN1090
C                                                                          HYMN1100
C     GENERATE NORMALIZED DISTRIBUTION AND OTHER TABULAR FUNCTIONS         HYMN1110
C                                                                          HYMN1120
  220 ZC  = XCMPL / RCH                                                    HYMN1130
      ZC = ZE                                                              HYMN1140
      IDZ = ZINC + 0.001                                                   HYMN1150
      CALL  INT4  ( ZDIST, DIST, ZC, UENRM )                               HYMN1160
      SCALE = UE / UENRM                                                   HYMN1170
      SIMPL = IDZ .LE. 0                                                   HYMN1180
      IF ( SIMPL )            GO TO 230                                    HYMN1190
```

```
      INT = 2                                                                   HYMN1200
      IDZ = IDZ/4 * 4                                                           HYMN1210
C           MUST BE POSITIVE MULTIPLE OF FOUR.  LESS THAN  101                  HYMN1220
      GO TO 240                                                                 HYMN1230
C                                                                               HYMN1240
  230 INT = 1                                                                   HYMN1250
      IDZ = -IDZ/2 * 2                                                          HYMN1260
C                                                                               HYMN1270
  240 IF ( ( IDZ .EQ. 0 ) .OR. ( IDZ .GT. 100 ) )  IDZ = 80                     HYMN1280
C                                                                               HYMN1290
C          IDZ  IS NUMBER OF Z-INCREMENTS.                                      HYMN1300
C                                                                               HYMN1310
      IDZP = IDZ + 1                                                            HYMN1320
      DZ  = ZC / FLOAT(IDZ)                                                     HYMN1330
C                                                                               HYMN1340
      ZZ(1) = 0.0                                                               HYMN1350
      U(1)  = 1.0E-10                                                           HYMN1360
      DU(1) = 0.0                                                               HYMN1370
      RHO(1)= 1.0                                                               HYMN1380
      ULO   = ULM/SOUND                                                         HYMN1390
      GF1 = -1.0 / (GAM-1.0)                                                    HYMN1400
      GF2 = (GAM-1.0) / 2.0                                                     HYMN1410
      RHOZE = ( 1.0 + GF2*UE*UE ) **GF1                                         HYMN1420
      RHOLO = RHOZE * UE / ULO                                                  HYMN1430
      QBAR(1) = 0.0                                                             HYMN1440
      ZIP3(1) = 0.0                                                             HYMN1450
      ZIP5(1) = RHOLO                                                           HYMN1460
C                     ABOVE ARE FIRST TABULAR ENTRIES.                          HYMN1470
C                                                                               HYMN1480
      Z = 0.0                                                                   HYMN1490
C                                                                               HYMN1500
      DO 250 IZ = 2, IDZP                                                       HYMN1510
         Z = Z + DZ                                                             HYMN1520
         CALL  INT4D  ( ZDIST, DISTM, Z, U(IZ), DU(IZ) )                        HYMN1530
         ZZ(IZ) = Z                                                             HYMN1540
         U (IZ) =  U(IZ)*SCALE                                                  HYMN1550
         DU(IZ) = DU(IZ)*SCALE                                                  HYMN1560
         UL(IZ) = UL(IZ-1) + XK*DZ*( U(IZ-1)-UL(IZ-1) )/UL(IZ-1)                HYMN1570
         TEMP = 1.0 + GAM*( U(IZ)-UL(IZ) )*U(IZ)                                HYMN1580
         RHO(IZ) = ( 1.0 + GF2*U(IZ)*U(IZ) ) **GF1                              HYMN1590
         RHOL(IZ) = ( RHOZE*UE - RHO(IZ)*U(IZ) ) / UL(IZ)                       HYMN1600
     0   QBAR(IZ) = ( ( 1.0 - GAM*U(IZ)*U(IZ) )*RHO(IZ)*DU(IZ)                 HYMN1610
     1              - GAM*U(IZ)*RHOL(IZ)*XK*( U(IZ)-UL(IZ) ) ) / TEMP           HYMN1620
         ZIP3(IZ) = DU(IZ) + DU(IZ)                                             HYMN1630
         ZIP5(IZ) = RHOL(IZ) / RHO(IZ)                                          HYMN1640
  250    CONTINUE                                                               HYMN1650
      ZZ(IDZP) = ZC                                                             HYMN1660
      U (IDZP) = UE                                                             HYMN1670
      DU(IDZP) = 0.0                                                            HYMN1680
      RHO(IDZP) = RHOZE                                                         HYMN1690
      RHOL(IDZP) = 0.0                                                          HYMN1700
      QBAR(IDZP) = 0.0                                                          HYMN1710
      ZIP3(IDZP) = 0.0                                                          HYMN1720
      ZIP5(IDZP) = 0.0                                                          HYMN1730
C                                                                               HYMN1740
C     QBAR, ZIP3, ZIP5  AS TABULATED ABOVE ARE FREQ-INDEPENDENT PARTS           HYMN1750
C        OF INTEGRANDS.                                                         HYMN1760
C                                                                               HYMN1770
C*****************************************************************************HYMN1780
      IF ( .NOT. HRUN )       GO TO 270                                         HYMN1790
C                                                                               HYMN1800
C         INITIAL VALUES FOR  HI-ORDER TABLES                                   HYMN1810
      HDZ = 0.5 * DZ                                                            HYMN1820
      D2U (1) = 0.0                                                             HYMN1830
      DRHO(1) = 0.0                                                             HYMN1840
      DROL(1) = 0.0                                                             HYMN1850
      DQ  (1) = 0.0                                                             HYMN1860
      DUL (1) = -XK                                                             HYMN1870
      V1  (1) = 0.0                                                             HYMN1880
      V2  (1) = 1.0                                                             HYMN1890
C                                                                               HYMN1900
      HDZR = 0.5/DZ                                                             HYMN1910
      A1 = HDZ/ULO                                                              HYMN1920
C                             HI-ORDER TABLES                                   HYMN1930
      DO 260 IZ = 2, IDZP                                                       HYMN1940
         A2 = HDZ/UL(IZ)                                                        HYMN1950
         V1(IZ) = V1(IZ-1) + A1 + A2                                            HYMN1960
         V2(IZ) = EXP( XK*V1(IZ) )                                              HYMN1970
         A1 = A2                                                                HYMN1980
         DUL (IZ) = ( UL  (IZ+1) - UL  (IZ-1) )*HDZR                            HYMN1990
         DRHO(IZ) = ( RHO (IZ+1) - RHO (IZ-1) )*HDZR                            HYMN2000
         DROL(IZ) = ( RHOL(IZ+1) - RHOL(IZ-1) )*HDZR                            HYMN2010
         DQ  (IZ) = ( QBAR(IZ+1) - QBAR(IZ-1) )*HDZR                            HYMN2020
         D2U (IZ) = ( DU  (IZ+1) - DU  (IZ-1) )*HDZR                            HYMN2030
  260    CONTINUE                                                               HYMN2040
C                     FINAL VALUES                                              HYMN2050
      DUL (IDZP) = XK*(UE-UL(IDZP))/UL(IDZP)                                    HYMN2060
      DROL(IDZP) = 0.0                                                          HYMN2070
      DRHO(IDZP) = 0.0                                                          HYMN2080
      DQ  (IDZP) = 0.0                                                          HYMN2090
      D2U (IDZP) = 0.0                                                          HYMN2100
      D2U(2) = 0.5*D2U(3)                                                       HYMN2110
      DQ (2) = 0.5*DQ (3)                                                       HYMN2120
      D2U(IDZ) = 0.5*D2U(IDZ-1)                                                 HYMN2130
      DQ (IDZ) = 0.5*DQ (IDZ-1)                                                 HYMN2140
C                                                                               HYMN2150
      KNOT = XK .EQ. 0.0                                                        HYMN2160
      XI2R = 0.0                                                                HYMN2170
      XI3R = 0.0                                                                HYMN2180
      XI4R = 0.0                                                                HYMN2190
      VK1 = 0.0                                                                 HYMN2200
      VK2 = 0.0                                                                 HYMN2210
      IF ( TABLR )              GO TO 270                                       HYMN2220
      ANH  = AVN(1)                                                             HYMN2230
      BNH  = BVN (1) * RLON                                                     HYMN2240
      CNHR = CVNR(1) * TLON                                                     HYMN2250
      CNHI = CVNI(1) * TLON                                                     HYMN2260
C                                                                               HYMN2270
  270 CONTINUE                                                                  HYMN2280
      NW  = XNW                                                                 HYMN2290
C                                                                               HYMN2300
C*****************************************************************************HYMN2310
C                                                                               HYMN2320
C     CALCULATIONS FOR EACH FREQUENCY, W                                        HYMN2330
C                                                                               HYMN2340
C*****************************************************************************HYMN2350
C                                                                               HYMN2360
      DO 820 IW = 1, NW                                                         HYMN2370
         W = WC(IW)                                                             HYMN2380
         OMEG2 = SNH*SNH - W*W                                                  HYMN2390
         OMEG = SQRT(ABS(OMEG2))                                                HYMN2400
```

```
      LIMIT = .FALSE.                                                   HYMN2410
C                                                                       HYMN2420
      CALL  INT4  ( WET, ERT, W, ER )                                   HYMN2430
      CALL  INT4  ( WET, EIT, W, EI )                                   HYMN2440
      IF ( OMEG2 )          280,290,300                                 HYMN2450
  280 IM = 1                                                            HYMN2460
      GO TO 310                                                         HYMN2470
C                                                                       HYMN2480
  290 IM = 2                                                            HYMN2490
     OMEG = 0.5E-10                                                     HYMN2500
     OMEG2 = 0.25E-20                                                   HYMN2510
C                                                                       HYMN2520
  300 IM = 3                                                            HYMN2530
C                                                                       HYMN2540
C   EVALUATION OF SIX INTEGRALS  BY  BOOLE  FORMULA  ( OR SIMPSON )     HYMN2550
C    BOOLE INTEGRATION IF  ZINC INPUT POSITIVE,  ELSE SIMPSON RULE      HYMN2560
C      ( BOOLE IS SIMPSON RULE WITH ERROR FORMULA )                     HYMN2570
C                                                                       HYMN2580
C      IM  IS  ( 1, 2, 3 )  AS  OMEG2  IS  ( -, 0, + ),                HYMN2590
C      THEN USE  ( CIRCULAR, LIMIT, HYPERBOLIC )  FUNCTIONS             HYMN2600
C                                                                       HYMN2610
  310 DO 320 I = 1, 6                                                   HYMN2620
  320    ZING(I) = 0.0                                                  HYMN2630
      NOD = 3                                                           HYMN2640
      DO 430 IZ = 1, IDZP, INT                                          HYMN2650
         Z = ZZ(IZ)                                                     HYMN2660
         GO TO (350,340,330), NOD                                       HYMN2670
C                                                                       HYMN2680
  330    WT = 1.0                                                       HYMN2690
         NOD = 1                                                        HYMN2700
         GO  TO 360                                                     HYMN2710
C                                                                       HYMN2720
  340    WT = 2.0                                                       HYMN2730
         IF ( IZ .EQ. IDZP )   GO TO 330                                HYMN2740
         NOD = 1                                                        HYMN2750
         GO TO 360                                                      HYMN2760
C                                                                       HYMN2770
  350    WT = 4.0                                                       HYMN2780
         NOD = 2                                                        HYMN2790
C                                                                       HYMN2800
  360    PSI = OMEG * (ZE-Z)                                            HYMN2810
         GO TO (390,370,380), IM                                        HYMN2820
C                                                                       HYMN2830
  370    ZEZ = ZE - Z                                                   HYMN2840
         ZF(1) = QBAR(IZ) * ZEZ                                         HYMN2850
         ZF(2) = QBAR(IZ)                                               HYMN2860
         ZF(3) = ZIP3(IZ) * ZEZ                                         HYMN2870
         ZF(4) = ZIP3(IZ)                                               HYMN2880
         ZF(5) = ZIP5(IZ) * ZEZ                                         HYMN2890
         ZF(6) = ZIP5(IZ)                                               HYMN2900
         GO TO 410                                                      HYMN2910
C                                                                       HYMN2920
  380    CF = COSH(PSI)                                                 HYMN2930
         SF = SINH(PSI)                                                 HYMN2940
         GO TO 400                                                      HYMN2950
C                                                                       HYMN2960
  390    CF = COS (PSI)                                                 HYMN2970
         SF = SIN (PSI)                                                 HYMN2980
C                                                                       HYMN2990
  400    ZF(1) = QBAR(IZ) * SF                                          HYMN3000
         ZF(2) = QBAR(IZ) * CF                                          HYMN3010
         ZF(3) = ZIP3(IZ) * SF                                          HYMN3020
         ZF(4) = ZIP3(IZ) * CF                                          HYMN3030
         ZF(5) = ZIP5(IZ) * SF                                          HYMN3040
         ZF(6) = ZIP5(IZ) * CF                                          HYMN3050
C       ZF ARE COMPLETE INTEGRANDS                                      HYMN3060
C                                                                       HYMN3070
  410    DO 420 I = 1, 6                                                HYMN3080
            ZING(I) = ZING(I) + WT*ZF(I)                                HYMN3090
  420       CONTINUE                                                    HYMN3100
  430    CONTINUE                                                       HYMN3110
C                                                                       HYMN3120
      GO TO (460,440), INT                                              HYMN3130
C                                                                       HYMN3140
  440 INT = 1                                                           HYMN3150
      DO 450 I = 1, 6                                                   HYMN3160
  450    SIMP(I) = ZING(I)*DZ/1.5                                       HYMN3170
C            SIMP IS SIMPSON INTEGRAL FOR IDZ/2 INCREMENTS              HYMN3180
      GO TO 310                                                         HYMN3190
C                                                                       HYMN3200
  460 DO 470 I = 1, 6                                                   HYMN3210
  470    ZING(I) = ZING(I)*DZ/3.0                                       HYMN3220
C            ZING IS SIMPSON INTEGRAL FOR  IDZ  INCREMENTS              HYMN3230
C                                                                       HYMN3240
      IF ( SIMPL )          GO TO 490                                   HYMN3250
     INT = 2                                                            HYMN3260
      DO 480 I = 1, 6                                                   HYMN3270
         ERRZ(I) = ( ZING(I)-SIMP(I) ) / 15.0                           HYMN3280
         IF ( ABS(ERRZ(I)/ZING(I) ) .GT. 0.05 )  CKOUT = .TRUE.         HYMN3290
C     ZING, SIMP ARE SIMPSON INTEGRALS WITH  IDZ, IDZ/2  INCREMENTS     HYMN3300
         ZING(I) = ZING(I) + ERRZ(I)                                    HYMN3310
C     CORRECTED  ZING  IS NOW  BOOLE INTEGRAL                           HYMN3320
  480    CONTINUE                                                       HYMN3330
C                                                                       HYMN3340
C       ABOVE  ZING(I)  ARE THE REQUIRED INTEGRALS                      HYMN3350
C                                                                       HYMN3360
  490 IF ( .NOT. CKOUT )    GO TO 500                                   HYMN3370
      WRITE (6,100)  ZING                                               HYMN3380
      IF ( .NOT. SIMPL )    WRITE (6,110)  ERRZ                         HYMN3390
C                                                                       HYMN3400
  500 OZE = OMEG * ZE                                                   HYMN3410
      WKSQ = XK*XK + W*W                                                HYMN3420
      T1 = XK*W / WKSQ                                                  HYMN3430
      T2 = W*W / WKSQ                                                   HYMN3440
C                                                                       HYMN3450
      Y1R = GAM*ZING(2)-ZING(2) + ZING(4) + W*T1*ZING(6)                HYMN3460
      Y1I = XK*T1*ZING(6)                                               HYMN3470
C                                                                       HYMN3480
      GO TO (530,510,520), IM                                           HYMN3490
C                                                                       HYMN3500
  510 Y2R = -SNH*ER/W                                                   HYMN3510
      Y2I = -SNH*EI/W                                                   HYMN3520
      ERCON = SNH*ER                                                    HYMN3530
      EICON = SNH*EI                                                    HYMN3540
      GO TO 550                                                         HYMN3550
C                                                                       HYMN3560
  520 COZE = COSH(OZE)                                                  HYMN3570
      SOZE = SINH(OZE)                                                  HYMN3580
      GO TO 540                                                         HYMN3590
C                                                                       HYMN3600
  530 COZE =  COS(OZE)                                                  HYMN3610
```

```
      SOZE = -SIN(OZE)                                                  HYMN3620
C                                                                       HYMN3630
  540 ERCON = SNH*ER/OMEG                                               HYMN3640
      EICON = SNH*EI/OMEG                                               HYMN3650
      Y2R = -SNH*ER/W*COZE                                              HYMN3660
      Y2I = -SNH*EI/W*COZE - OMEG/W*SOZE                                HYMN3670
C                                                                       HYMN3680
  550 TEMP = GAM*ZING(1)-ZING(1) + ZING(3) + W*T1*ZING(5)               HYMN3690
      Y3R = ERCON*XK*T1*ZING(5) + EICON*TEMP                            HYMN3700
      Y3I = EICON*XK*T1*ZING(5) - ERCON*TEMP                            HYMN3710
      Y6R =  EICON*ZING(1) + ZING(2)                                    HYMN3720
      Y6I = -ERCON*ZING(1)                                              HYMN3730
C                                                                       HYMN3740
C                                                                       HYMN3750
C*********************************************************************  HYMN3760
C                                                                       HYMN3770
C****   CALCULATION OF FIRST-ORDER SOLUTION...                          HYMN3780
C                                                                       HYMN3790
C                                                                       HYMN3800
C                                                                       HYMN3810
  560 H1R = ( Y1R+Y2R+Y3R )/GAM                                         HYMN3820
      H1I = ( Y1I+Y2I+Y3I )/GAM                                         HYMN3830
      HD = Y6R*Y6R + Y6I*Y6I                                            HYMN3840
C                                                                       HYMN3850
      HR = ( H1R*Y6R + H1I*Y6I ) / HD                                   HYMN3860
      HI = ( H1I*Y6R - H1R*Y6I ) / HD                                   HYMN3870
C                                                                       HYMN3880
      THR(IW) = HR                                                      HYMN3890
      THI(IW) = HI                                                      HYMN3900
C                                                                       HYMN3910
      IF ( .NOT. HRUN )     GO TO 820                                   HYMN3920
C                                                                       HYMN3930
C*********************************************************************  HYMN3940
C                                                                       HYMN3950
C     TERMS FROM HIGH-ORDER ANALYSIS   ( STILL IN  W-LOOP )             HYMN3960
C        INITIALIZE  INTEGRALS, INTEGRANDS FOR  Z=0.0                   HYMN3970
C                                                                       HYMN3980
      DO 570 I = 1, 6                                                   HYMN3990
         AL(I) = 0.0                                                    HYMN4000
         DO 570 IZ = 1, IDZP                                            HYMN4010
  570       GS(I,IZ) = 0.0                                              HYMN4020
      DO 580 I = 1, 12                                                  HYMN4030
         OLD(I) = 0.0                                                   HYMN4040
         ZAP(I) = 0.0                                                   HYMN4050
         GL(I,1) = 0.0                                                  HYMN4060
  580    SLAM(I) = 0.0                                                  HYMN4070
      OLD(3) = -XK*OMEG2                                                HYMN4080
      IF ( IM .EQ. 1 )     SOZE = -SOZE                                 HYMN4090
      NOD = 1                                                           HYMN4100
      TEMP = -T1*RHOLO                                                  HYMN4110
      GL( 9,1) = TEMP*XK*W*SOZE                                         HYMN4120
      GL(10,1) = TEMP*XK*W*COZE                                         HYMN4130
      GL(11,1) = TEMP*OMEG2*SOZE                                        HYMN4140
      GL(12,1) = TEMP*OMEG2*COZE                                        HYMN4150
C                                                                       HYMN4160
      IF ( .NOT. TABLR )   GO TO 585                                    HYMN4161
      CALL  INT4  ( WIT, AVN , W, ANH  )                                HYMN4162
      CALL  INT4  ( WIT, BVN , W, BNH  )                                HYMN4163
      CALL  INT4  ( WIT, CVNR, W, CNHR )                                HYMN4164
      CALL  INT4  ( WIT, CVNI, W, CNHI )                                HYMN4165
C                                                                       HYMN4166
      BNH  = RLON * BNH                                                 HYMN4167
      CNHR = TLON * CNHR                                                HYMN4168
      CNHI = TLON * CNHI                                                HYMN4169
C                                                                       HYMN4170
  585 YE = ANH - CNHI/(W*GAM)                                           HYMN4171
      YF = ( BNH + CNHR ) / (W*GAM)                                     HYMN4180
      H2R = Y6R*YE - Y6I*YF                                             HYMN4190
      H2I = Y6R*YF + Y6I*YE                                             HYMN4200
      HSSQ = H2R*H2R + H2I*H2I                                          HYMN4210
      HA = ( H1R*H2R + H1I*H2I ) / HSSQ                                 HYMN4220
      HB = ( H1I*H2R - H1R*H2I ) / HSSQ                                 HYMN4230
C                                                                       HYMN4240
      CALL  INT4  ( WET, CRT, W, CR )                                   HYMN4250
      CALL  INT4  ( WET, CIT, W, CI )                                   HYMN4260
C                                                                       HYMN4270
      GO TO (590,610,630),  IM                                          HYMN4280
  590 DO 600 IZ = 1, IDZP                                               HYMN4290
         ARG = OMEG*ZZ(IZ)                                              HYMN4300
         STAB(IZ) = SIN (ARG)                                           HYMN4310
  600    CTAB(IZ) = COS (ARG)                                           HYMN4320
      SIGN = -1.0                                                       HYMN4330
      GO TO 650                                                         HYMN4340
C                                                                       HYMN4350
  610 DO 620 IZ = 1, IDZP                                               HYMN4360
         STAB(IZ) = ZZ(IZ)                                              HYMN4370
  620    CTAB(IZ) = 1.0                                                 HYMN4380
      GL(11,1) = TEMP * ZE                                              HYMN4390
      GL(12,1) = TEMP                                                   HYMN4400
      GO TO 650                                                         HYMN4410
C                                                                       HYMN4420
  630 DO 640 IZ = 1, IDZP                                               HYMN4430
         ARG = OMEG*ZZ(IZ)                                              HYMN4440
         STAB(IZ) = SINH(ARG)                                           HYMN4450
  640    CTAB(IZ) = COSH(ARG)                                           HYMN4460
      SIGN = 1.0                                                        HYMN4470
C                                                                       HYMN4480
C                                                                       HYMN4490
  650 DO 780 IZ = 2, IDZP                                               HYMN4500
         NOD = NOD + 1                                                  HYMN4510
         V3 = XK*RHOL(IZ)/RHO(IZ)                                       HYMN4520
         V4 = DU(IZ) + V3                                               HYMN4530
         V5 = QBAR(IZ)*V4 + RHO(IZ)*U(IZ)*DQ(IZ)                        HYMN4540
         V6 = ( RHOL(IZ)/UL(IZ)*DUL(IZ) - DROL(IZ) ) / RHO(IZ)          HYMN4550
         V7 = ( 2.0*(D2U(IZ)-DU(IZ)) + V3 - XK*V6 )                     HYMN4560
         V8  = XK*ZIPS(IZ) - U(IZ) - 3.0*DU(IZ)                         HYMN4570
    0    V9  = V3*( DU(IZ) - DUL(IZ) - UL(IZ)/RHOL(IZ)*DROL(IZ) )       HYMN4580
    1           + DU(IZ)*DU(IZ)                                         HYMN4590
    0    V10 = ( GAM*DQ(IZ) - DQ(IZ) + RHO(IZ)*D2U(IZ) + D2U(IZ) )      HYMN4600
    1           * U(IZ)/RHO(IZ)                                         HYMN4610
         V11 = U(IZ)/RHO(IZ)*DROL(IZ)/RHO(IZ)                           HYMN4620
         V12 = ( GAM*QBAR(IZ) - QBAR(IZ) )*DU(IZ)                       HYMN4630
         V13 = ( V12 + D2U(IZ) )/RHO(IZ)                                HYMN4640
         V16 = QBAR(IZ)/RHO(IZ)                                         HYMN4650
         V17 = (GAM-1.0) * ( V16*V16 + U(IZ)/RHO(IZ)*DQ(IZ) )           HYMN4660
    0    V18 = ((U(IZ)-UL(IZ))*DQ(IZ) + QBAR(IZ)*(DU(IZ)-DUL(IZ)))      HYMN4670
    1           * RHO(IZ)                                               HYMN4680
         V19 = ( UL(IZ)-XK-DUL(IZ) ) / ( UL(IZ)*UL(IZ) ) * RHOL(IZ)     HYMN4690
         V20 = V19 + DROL(IZ)/UL(IZ)                                    HYMN4700
         V21 = V16 - GAM*V16 - DU(IZ) - DU(IZ)/RHO(IZ)                  HYMN4710
         V22 = GAM - 1.0                                                HYMN4720
```

```
                V23 = RHO(IZ) + 1.0                                          HYMN4730
                V24 = RHO(IZ) - 1.0                                          HYMN4740
                V25 = V22 * (QBAR(IZ)*DU(IZ) + U(IZ)*DQ(IZ))                HYMN4750
                V26 = DU(IZ) * (V22*QBAR(IZ) + (GAM + V23)*DU(IZ))           HYMN4760
                V27 = RHO(IZ)*V10/T2                                         HYMN4770
     0          V28 = V22 * (QBAR(IZ)*(QBAR(IZ)/RHO(IZ) + DU(IZ))           HYMN4780
     1                    + 2.0*U(IZ)*DQ(IZ))                               HYMN4790
     0          V29 = RHO(IZ) * (D2U(IZ)*(U(IZ) - UL(IZ))                   HYMN4800
     1                      + DU(IZ)*(DU(IZ) - DUL(IZ)))                    HYMN4810
                V30 = U(IZ)*D2U(IZ)                                          HYMN4820
C                                                                            HYMN4830
C     THE FUNCTIONS  V1 ... V20  ARE INDEPENDENT OF W.  HENCE WE COULD       HYMN4840
C       TRADE CORE FOR TIME BY TAKING ALL OR SOME OUT OF W-LOOP AS           HYMN4850
C       SUBSCRIPTED VARIABLES.  LET S SEE FIRST WHAT CORE WE HAVE.           HYMN4860
C                                                                            HYMN4870
                ARG = W * V1(IZ)                                             HYMN4880
                CWV = COS(ARG)                                               HYMN4890
                SWV = SIN(ARG)                                               HYMN4900
                XI10R = CWV*V2(IZ)/RHO(IZ)                                   HYMN4910
                XI10I = SWV*V2(IZ)/RHO(IZ)                                   HYMN4920
                ZETAR = CWV/V2(IZ)                                           HYMN4930
                ZETAI = SWV/V2(IZ)                                           HYMN4940
                XI14R = XI10R*DUL(IZ)                                        HYMN4950
                XI14I = XI10I*DUL(IZ)                                        HYMN4960
                OZEZ = OMEG * ( ZE-ZZ(IZ) )                                  HYMN4970
                GO TO (660,670,680), IM                                      HYMN4980
C                                                                            HYMN4990
  660           P0  = CTAB(IZ)                                               HYMN5000
                PP0 = -OMEG*STAB(IZ)                                         HYMN5010
                ST = SIN ( OZEZ )                                            HYMN5020
                CT = COS ( OZEZ )                                            HYMN5030
                GO TO 690                                                    HYMN5040
C                                                                            HYMN5050
  670           P0  = 1.0                                                    HYMN5060
                PP0 = 0.0                                                    HYMN5070
                ST = ZE-ZZ(IZ)                                               HYMN5080
                CT = 1.0                                                     HYMN5090
                GO TO 690                                                    HYMN5100
C                                                                            HYMN5110
  680           P0  = CTAB(IZ)                                               HYMN5120
                PP0 = OMEG*STAB(IZ)                                          HYMN5130
                ST = SINH( OZEZ )                                            HYMN5140
                CT = COSH( OZEZ )                                            HYMN5150
C                                                                            HYMN5160
  690           IJK = 0                                                      HYMN5170
                DO 700 JZ = IZ, IDZP                                         HYMN5180
                   IJK = IJK + 1                                             HYMN5190
     0             GS(1,JZ) = (QBAR(IZ)*STAB(IJK)+QBAR(IZ-1)*STAB(IJK+1))  HYMN5200
     1                      * HDZ + GS(1,JZ)                                HYMN5210
     0             GS(2,JZ) = (QBAR(IZ)*CTAB(IJK)+QBAR(IZ-1)*CTAB(IJK+1))  HYMN5220
     1                      * HDZ + GS(2,JZ)                                HYMN5230
     0             GS(3,JZ) = (ZIP3(IZ)*STAB(IJK)+ZIP3(IZ-1)*STAB(IJK+1))  HYMN5240
     1                      * HDZ + GS(3,JZ)                                HYMN5250
     0             GS(4,JZ) = (ZIP3(IZ)*CTAB(IJK)+ZIP3(IZ-1)*CTAB(IJK+1))  HYMN5260
     1                      * HDZ + GS(4,JZ)                                HYMN5270
     0             GS(5,JZ) = (ZIP5(IZ)*STAB(IJK)+ZIP5(IZ-1)*STAB(IJK+1))  HYMN5280
     1                      * HDZ + GS(5,JZ)                                HYMN5290
     0             GS(6,JZ) = (ZIP5(IZ)*CTAB(IJK)+ZIP5(IZ-1)*CTAB(IJK+1))  HYMN5300
     1                      * HDZ + GS(6,JZ)                                HYMN5310
C                                                                            HYMN5320
  700           CONTINUE                                                     HYMN5330
C                                                                            HYMN5340
                P10R = -XK*W*GS(5,IZ) * T1                                   HYMN5350
                P10I = ( GAM*GS(1,IZ)-GS(1,IZ)+GS(3,IZ)+W*T1*GS(5,IZ) ) * W  HYMN5360
C             ( P11R = 0.0 )                                                 HYMN5370
                P11I = -W*GS(1,IZ)                                           HYMN5380
                IF ( LIMIT )        GO TO 710                                HYMN5390
                P10R = P10R/OMEG                                             HYMN5400
                P10I = P10I/OMEG                                             HYMN5410
                P11I = P11I/OMEG                                             HYMN5420
  710           PP10R = -W*XK*T1 * GS(6,IZ)                                  HYMN5430
     0          PP10I = (GAM*GS(2,IZ) - GS(2,IZ) + GS(4,IZ)                  HYMN5440
     1                                           + W*T1*GS(6,IZ) ) * W       HYMN5450
C             ( PP11R = 0.0 )                                                HYMN5460
                PP11I = -W*GS(2,IZ)                                          HYMN5470
C                                                                            HYMN5480
                IF ( KNOT )         GO TO 730                                HYMN5490
C                 EVALUATE INTEGRALS IN EXPRESSIONS FOR LAMDAS  ( AL(I) )    HYMN5500
                XI16R = ( W*RHOL(IZ)*ZETAR - V19*ZETAI ) * T1                HYMN5510
                XI16I = ( W*RHOL(IZ)*ZETAI - V19*ZETAR ) * T1                HYMN5520
                T3 = ( W*T1*DROL(IZ)/RHO(IZ) + D2U(IZ) ) * P0                HYMN5530
                G(1) = T3 * XI10R                                            HYMN5540
                G(2) = T3 * XI10I                                            HYMN5550
                T4 = OMEG2*P0 + PP0                                          HYMN5560
                G(3) = XI14R * T4                                            HYMN5570
                G(4) = XI14I * T4                                            HYMN5580
                G(5) = PP0 * XI10R                                           HYMN5590
                G(6) = PP0 * XI10I                                           HYMN5600
                G( 7) = XI14R * PP11I                                        HYMN5610
                G( 8) = XI14I * PP11I                                        HYMN5620
                G( 9) = XI14R * PP10R                                        HYMN5630
                G(10) = XI14I * PP10R                                        HYMN5640
                G(11) = XI14R * PP10I                                        HYMN5650
                G(12) = XI14I * PP10I                                        HYMN5660
C                                                                            HYMN5670
                DO 720 I = 1, 12                                             HYMN5680
                   ZAP(I) = ( G(I) + OLD(I) )*HDZ + ZAP(I)                   HYMN5690
  720              OLD(I) = G(I)                                            HYMN5700
C                       ( TRAPEZOIDAL RULE )                                 HYMN5710
     0          VK1 = XK * (  T2*RHOL(IZ)/RHO(IZ)*(V24*DU(IZ) - V3)         HYMN5720
     1                      + RHOL(IZ) * (W*T1*RHOL(IZ)/RHO(IZ)+DU(IZ)      HYMN5730
     2                                  - DUL(IZ) - XK*ZETAR)               HYMN5740
     3                      - UL(IZ)*DROL(IZ) - U(IZ)/RHO(IZ)*DROL(IZ)      HYMN5750
     4                  - RHOL(IZ)/RHO(IZ)*(V22*QBAR(IZ) + V23*DU(IZ)))     HYMN5760
     0          VK2 = XK * (  T2*U(IZ)/RHO(IZ)*DROL(IZ)                      HYMN5770
     1                      + XK*GAM*RHOL(IZ)*ZETAI/W)                       HYMN5780
C                                                                            HYMN5790
  730           XI1R = T2/RHO(IZ) * (V25 - V26 - V27 - V28 + V29 + VK1)      HYMN5800
                XI1I = T2 * (VK2 + V30)                                      HYMN5810
                XI2I = ( GAM*V16 - V16 + DU(IZ) + T2*V4 )*W                  HYMN5820
                XI3I = W*U(IZ) - T2/W*V7                                     HYMN5830
                XI4I = T1*V6 + 2.0*W*U(IZ)                                   HYMN5840
                XI5I = ( T2*V8 + DU(IZ)/RHO(IZ) )/W                          HYMN5850
C               XI2R = XI3R = XI4R = XI5R = 0                                HYMN5860
C                                                                            HYMN5870
C                                                                            HYMN5880
C                                                                            HYMN5890
                IF ( KNOT )         GO TO 740                                HYMN5900
                A1R = -XI16R*ZAP(8) - XI16I*ZAP(7)                           HYMN5910
                A1I =  XI16R*ZAP(7) - XI16I*ZAP(8) + GAM*P0*V5*T1            HYMN5920
                A2R = T1/W*(V16*V3-V5/RHO(IZ))*P0                            HYMN5930
```

```
            T5 = W/UL(IZ) * RHOL(IZ)/UL(IZ)                                    HYMN5940
            T6 = V20*ZETAI - T5*ZETAR                                          HYMN5950
            T7 = V20*ZETAR - T5*ZETAI                                          HYMN5960
            T8 = W/RHO(IZ) * ( RHOL(IZ) - RHO(IZ)*RHOL(IZ) )                   HYMN5970
C                                                                              HYMN5980
     0      A4R = T1 * ( T8*( ZETAI*ZAP(5) + ZETAR*ZAP(6) )                    HYMN5990
     1                - RHOL(IZ)*( ZETAR*ZAP(1) + ZETAI*ZAP(2) )              HYMN6000
     2                - T6*ZAP(3) + T7*ZAP(4) )                               HYMN6010
     3             + XI16R*(ZAP( 9)-ZAP(12)) - XI16I*(ZAP(11)+ZAP(10))       HYMN6020
C                                                                              HYMN6030
     0      A4I = T1 * ( T8*( ZETAI*ZAP(6) - ZETAR*ZAP(5) )                    HYMN6040
     1                - RHOL(IZ)*( ZETAR*ZAP(2) - ZETAI*ZAP(1) )              HYMN6050
     2                - T7*ZAP(3) - T6*ZAP(4) )                               HYMN6060
     3             + XI16R*(ZAP(11)+ZAP(10)) + XI16I*(ZAP( 9)-ZAP(12))       HYMN6070
C                                                                              HYMN6080
  740       T9  = HA * P11I                                                    HYMN6090
            T10 = HB * P11I                                                    HYMN6100
            TEMP = -GAM*W*QBAR(IZ)                                             HYMN6110
     0      A1R = A1R + TEMP*(T9+P10I) + GAM*P0*(V18+T2*V5)                    HYMN6120
     1              + XI2I*P11I + XI4I*PP11I                                   HYMN6130
            A1I = A1I + TEMP*(T10-P10R)                                        HYMN6140
            A2R = A2R + V16*(T10-P10R)                                         HYMN6150
     0      A2I = ( (V18+T2*V5)/RHO(IZ) - V16*(V3*T2-DU(IZ)) )/W*P0            HYMN6160
     1          -V16*(T9+P10I)                                                HYMN6170
     0      A4R = A4R + XI1R*P0    + XI4I*PP10I        + XI2I*P10I             HYMN6180
     0      A4I = A4I + ( XI1I-OMEG2*XI5I )*P0 - XI3I*PP0  - XI4I*PP10R        HYMN6190
     1                - XI2I*P10R                                             HYMN6200
C                                                                              HYMN6210
C*****************************************************************         HYMN6220
C                                                                              HYMN6230
C     SET UP INTEGRANDS  (  SIMPSON RULE HERE  )                               HYMN6240
            DO 750 I = 1, 6                                                    HYMN6250
               GL(2*I-1,NOD) = AL(I)*ST                                        HYMN6260
               GL(2*I  ,NOD) = AL(I)*CT                                        HYMN6270
               AL(I) = 0.0                                                     HYMN6280
  750          CONTINUE                                                       HYMN6290
C                                                                              HYMN6300
            GO TO (780,780,760), NOD                                           HYMN6310
C                                                                              HYMN6320
  760       DO 770 I = 1, 12                                                   HYMN6330
               SLAM(I) = SLAM(I) + GL(I,1) + 4.0*GL(I,2) + GL(I,3)             HYMN6340
C                                  WEIGHTED SUM FOR THREE ORDINATES            HYMN6350
               GL(I,1) = GL(I,3)                                               HYMN6360
  770          CONTINUE                                                       HYMN6370
            NOD = 1                                                            HYMN6380
C                                                                              HYMN6390
  780       CONTINUE                                                         HYMN6400
C                                                                              HYMN6410
C*******************   ENDS  PRINCIPAL  Z-LOOP   ******************           HYMN6420
C                        STILL DOING FOR  IW                                   HYMN6430
C                                                                              HYMN6440
C*****************************************************************         HYMN6450
C                                                                              HYMN6460
C        COMPLETE INTEGRATION                                                  HYMN6470
         DO 790 I = 1, 12                                                      HYMN6480
            SLAM(I) = SLAM(I) * DZ/3.0                                         HYMN6490
  790       CONTINUE                                                         HYMN6500
      IF ( LIMIT )            GO TO 800                                        HYMN6510
C     CALCULATE DEFECT  ( CONTRIBUTION OF INTEGRALS FROM  Z=ZC TO Z=ZE )       HYMN6520
         TEMP = 2.0*W*UE                                                       HYMN6530
         SLAM( 1) = SLAM( 1) + TEMP*PP11I*(CF-1.0)/OMEG2                       HYMN6540
         SLAM( 2) = SLAM( 2) + TEMP*PP11I*SF/OMEG                              HYMN6550
         SLAM( 9) = SLAM( 9) + TEMP*PP10I*(CF-1.0)/OMEG2                       HYMN6560
         SLAM(10) = SLAM(10) + TEMP*PP10I*SF/OMEG                              HYMN6570
         SLAM(11) = SLAM(11) - TEMP*PP10R*(CF-1.0)/OMEG2                       HYMN6580
     1            -0.5*W*UE*( PSI*COZE-CTAB(IDZP)*SF )/OMEG                   HYMN6590
     2            + 0.5*T2/W*UE*( PSI*SOZE-STAB(IDZP)*SF )*SIGN               HYMN6600
         SLAM(12) = SLAM(12) - TEMP*PP10R*SF/OMEG                              HYMN6610
     1            - 0.5*W*UE*( PSI*SOZE-STAB(IDZP)*SF )*SIGN                  HYMN6620
     2            + 0.5*T2/W*UE*( PSI*COZE+CTAB(IDZP)*SF )*OMEG*SIGN          HYMN6630
C                                                                              HYMN6640
  800    G21R  = ANH*SLAM(1) + BNH*SLAM(5) + CNHR*SLAM(5) - CNHI*SLAM(7)       HYMN6750
         G21I  = ANH*SLAM(3) + BNH*SLAM(7) + CNHR*SLAM(7) + CNHI*SLAM(5)       HYMN6760
         DG21R = ANH*SLAM(2) + BNH*SLAM(6) + CNHR*SLAM(6) - CNHI*SLAM(8)       HYMN6770
         DG21I = ANH*SLAM(4) + BNH*SLAM(8) + CNHR*SLAM(8) + CNHI*SLAM(6)       HYMN6780
C                                                                              HYMN6790
C         THE FOLLOWING AVAILABLE BY EQUIVALENCE...                            HYMN6800
C        G20R    IS  SLAM ( 9)                                                 HYMN6810
C        G20I    IS  SLAM (11)                                                 HYMN6820
C        DG20R   IS  SLAM (10)                                                 HYMN6830
C        DG20I   IS  SLAM (12)                                                 HYMN6840
C                                                                              HYMN6850
C     FOR NONZERO OMEG, DIVISION BY OMEG IS IMPLICIT IN ERCON, EICON.          HYMN6860
C     IAR, IAI, IBR, IBI  ARE TYPE REAL.                                       HYMN6870
         TEMP = UE * W * ZING(2)                                               HYMN6880
      0  IAR = H1R - DG20R - ERCON*G20I - EICON*G20R                           HYMN6890
      1          + ( ( CI*Y1I - CR*Y1R )*W + CR*Y1I + CI*Y1R )*W*UE           HYMN6900
      0  IAI = H1I - DG20I + ERCON*G20R - EICON*G20I                           HYMN6910
      1          - ( ( CR*Y1I + CI*Y1R )*W + CR*Y1R - CI*Y1I )*W*UE           HYMN6920
         IBR = H2R + DG21R + ERCON*G21I + EICON*G21R + TEMP*( CI-W*CR )        HYMN6930
         IBI = H2I + DG21I - ERCON*G21R + EICON*G21I - TEMP*( CR+W*CI )        HYMN6940
C                                                                              HYMN6950
         HTD = IBR*IBR + IBI*IBI                                               HYMN6960
         HTR = ( IAR*IBR + IAI*IBI ) / HTD                                     HYMN6970
         HTI = ( IAI*IBR - IAR*IBI ) / HTD                                     HYMN6980
C                                                                              HYMN6990
         THTR(IW) = HTR                                                        HYMN7000
         THTI(IW) = HTI                                                        HYMN7010
C                                                                              HYMN7020
      IF ( .NOT. CKOUT )     GO TO 820                                         HYMN7030
      WRITE (6,150)                                                            HYMN7040
      WRITE (6,160)  W  ,  IAR,  IAI ,  IBR ,  IBI , ERCON, EICON,            HYMN7050
     1             G20R, G21R, DG20R, DG21R,  H1R ,  H2R ,  CR  ,            HYMN7060
     2             G20I, G21I, DG20I, DG21I,  H1I ,  H2I ,  CI               HYMN7070
C                                                                              HYMN7080
  820    CONTINUE                                                             HYMN7090
C                        END  OF  W-LOOP                                       HYMN7100
C*****************************************************************         HYMN7110
C                                                                              HYMN7120
      KER = NW                                                                 HYMN7130
      XOUT(9) = XNW                                                            HYMN7140
C                                                                              HYMN7150
      IF ( HRUN )     GO TO 850                                                HYMN7160
C                                                                              HYMN7170
      DO 830 IW = 1, NW                                                        HYMN7180
         XOUT(IW+ 9) = WC (IW)                                                 HYMN7190
         XOUT(IW+39) = THR(IW)                                                 HYMN7200
         XOUT(IW+69) = THI(IW)                                                 HYMN7210
  830    CONTINUE                                                             HYMN7220
      GO TO (880,840), KOUT                                                    HYMN7230
  840 IF ( CKOUT )     CALL PAGE  ( 70 )                                       HYMN7240
```

```
      WRITE (6,40)                                                      HYMN7250
      WRITE (6,50)  ( WC(I), THR(I), THI(I),  I = 1, NW  )              HYMN7260
      GO TO 880                                                         HYMN7270
C                                                                       HYMN7280
  850 DO 860 IW = 1, NW                                                 HYMN7290
        XOUT(IW+ 9) = WC (IW)                                           HYMN7300
        XOUT(IW+39) = THTR(IW)                                          HYMN7310
        XOUT(IW+69) = THTI(IW)                                          HYMN7320
  860   CONTINUE                                                        HYMN7330
      GO TO (880,870),  KOUT                                            HYMN7340
  870 IF ( CKOUT )      CALL PAGE  ( 70 )                               HYMN7350
      WRITE (6,40)                                                      HYMN7360
      WRITE (6,60)  ( WC(I), THR(I), THI(I), THTR(I), THTI(I),          HYMN7370
     1                I = 1, NW  )                                     HYMN7380
C                                                                       HYMN7390
  880 IF ( .NOT. CKOUT )      GO TO 890                                 HYMN7400
      CALL  PAGE ( 70 )                                                 HYMN7410
      WRITE (6,120)  ( ZZ(I), U(I), DU(I), UL(I), RMO(I), RMOL(I),      HYMN7420
     1  QBAR(I), ZIP3(I), ZIP5(I),  I = 1, IDZP )                      HYMN7430
      IF  ( .NOT. HRUN )     GO TO 890                                  HYMN7440
      CALL  PAGE ( 70 )                                                 HYMN7450
      WRITE (6,130)                                                     HYMN7460
      WRITE (6,140)  ( ZZ(I),D2U(I),DUL(I),DRMO(I),DRGL(I),DQ(I),V1(I), HYMN7470
     1    V2(I),  I = 1, IDZP )                                         HYMN7480
C                                                                       HYMN7490
C                                                                       HYMN7500
C                                                                       HYMN7510
C     N.B.  HTR, HTI  ARE FINAL RESULTS OF THIS SUBROUTINE WHEN PLACED  HYMN7520
C           IN XOUT.   HTR, HTI INCLUDE INJECTOR EFFECTS, WHILE  HR, HI HYMN7530
C           DO NOT.  HENCE IF SUBROUTINE  DDD  IS ENTERED WITH HTR, HTI,HYMN7540
C           DDD  WILL EXPAND TABLE (BY INTERPOLATION), PRINT,           HYMN7550
C           AND RETURN.                                                 HYMN7560
C                                                                       HYMN7570
C                                                                       HYMN7580
C                                                                       HYMN7590
  890 RETURN                                                            HYMN7600
          END                                                           HYMN7610
```

```
$IBFTC HTINT   LIST,M94                                                    HTNT
      SUBROUTINE DDD(DIN,DOUT,CD,NER,ERR)                                  HTNT  10
C                                                                          HTNT  20
C     PROGRAM  D  COMPUTE HTR,HTI + INTERPOLATE 40 POINTS                  HTNT  30
C           20 SEP 67  MODIFIED FOR TABULAR INJECTOR COEFFICIENTS          HTNT  40
C                                                                          HTNT  50
      LOGICAL LOGIK,HRUN,TABLR                                             HTNT  60
      COMMON /PROLOG/ LOGIK(50)                                            HTNT  70
      COMMON  /ABCDF /  EXTRA(100),  ABLOK(600), A    , B , SPACE(3556), HTNT  80
     1         WIT(17), AVN(17), BVN(17),CVNR(17), CVNI(17)                HTNT  90
      DIMENSION DIN(1),DOUT(1),A(133),B(133),OMEGA(1),HR(1),HI(1)          HTNT 100
     1,HTR(30),HTI(30),HTRINT(1),HTIINT(1), OMGA(1)                        HTNT 110
     2,DOM(30)                                                             HTNT 120
      EQUIVALENCE (LOGIK(8),HRUN),(LOGIK(17),TABLR)                        HTNT 130
      EQUIVALENCE (A(1),ANH),(A(2),BNH),(A(3),CNHRE),(A(4),CNHIM),         HTNT 140
     1(A(5),GAMMA),(A(6),XLRN),(A(7),XLON),(A(9),XNW),(A(10),OMEGA),       HTNT 150
     2(A(40),HR),(A(70),HI),(B(9),ONW),(B(10),OMGA),(B(51),HTRINT),        HTNT 160
     3(B(92),HTIINT) ,  ( OMEGA, DOM )                                     HTNT 170
C                                                                          HTNT 180
   10 FORMAT ( 21H0 INPUT TO PROGRAM  D // 10X8H GAMMA = F8.4,5X6HLR/N =HTNT 190
     1  F12.8, 5X6HLT/N = F12.8 )                                         HTNT 200
   20 FORMAT ( 18X3HANH12X3HBNH11X6HCNH RE 9X6HCNH IM // 9X 4F15.7 // ) HTNT 210
   30 FORMAT ( // 38H INJECTOR DISTRIBUTION COEFFICIENTS... //           HTNT 220
     117X5HOMEGA 11X3HANH 12X3HBNH 11X6HCNH RE 9X6HCNH IM // (9X5F15.7))HTNT 230
   40 FORMAT (1H0, 19X,8HOMEGA(C),9X3H HR,13X3H HI  )                    HTNT 240
   50 FORMAT (1H0,19X, 8HOMEGA(C),9X3HHTR 13X3HHTI )                     HTNT 250
   60 FORMAT(1H ,10X,3F16.6)                                             HTNT 260
   70 FORMAT (1H0 ,20H PROGRAM  D  OUTPUT  // 19X,8HOMEGA(C) 9X          HTNT 270
     16H   HTR ,10X,6H   HTI  // )                                       HTNT 280
   80 FORMAT (91H0ALL VALUES OF HTR ARE NEGATIVE- ( I.E. OUT OF RANGE OFHTNT 290
     1INTEREST- WILL PROCEED TO NEXT CASE))                              HTNT 300
   90 FORMAT(//,30X,69H   FOLLOWING WILL BE INTERPOLATION WITHIN HTR HTIHTNT 310
     1 TABLE GIVEN ABOVE   )                                             HTNT 320
  100 FORMAT (19X,8H OMEGA  ,9X6HHTRINT,10X,6HHTIINT  )                  HTNT 330
  110 FORMAT (11X,F10.5,10X,F10.5,10X,F10.5)                             HTNT 340
C                                                                          HTNT 350
      ERR=0.0                                                              HTNT 360
      NER=0                                                                HTNT 370
      CALL DVCHK (K000FX)                                                  HTNT 380
  120 DO 130 I=1,133                                                       HTNT 390
      A(I)= DIN(I)                                                         HTNT 400
  130 B(I)=0.0                                                             HTNT 410
      NER=IFIX(XNW)                                                        HTNT 420
      IF(NER)140,140,160                                                   HTNT 430
  140 WRITE (6,150)NER                                                     HTNT 440
  150 FORMAT (1H0,10X,31H NUMBER OF OMEGAS IN ERROR  =  ,3X,I4   )         HTNT 450
      GO TO 510                                                            HTNT 460
  160 IF(NER-29)170,170,140                                                HTNT 470
  170 ONW = 40.0                                                           HTNT 480
      IF ( HRUN )              GO TO 190                                   HTNT 490
      NWI = A(8) + 0.01                                                    HTNT 500
      IF ( NWI .GT. 2 )        GO TO 180                                   HTNT 510
      ASSIGN 280 TO  NT                                                    HTNT 520
      TABLR = .FALSE.                                                      HTNT 530
      ANH = AVN (1)                                                        HTNT 540
      BNH = BVN (1)                                                        HTNT 550
      CNHRE = CVNR(1)                                                      HTNT 560
      CNHIM = CVNI(1)                                                      HTNT 570
      GO TO 190                                                            HTNT 580
  180 ASSIGN 270 TO  NT                                                    HTNT 590
      TABLR = .TRUE.                                                       HTNT 600
  190 IF(CD-99.0)260,260,200                                               HTNT 610
  200 CALL  PAGE  ( 60 )                                                   HTNT 620
      WRITE (6,10)  GAMMA, XLRN, XLON                                      HTNT 630
      IF ( HRUN  )             GO TO 230                                   HTNT 640
      IF ( TABLR )             GO TO 210                                   HTNT 650
      WRITE (6,20)  ANH, BNH, CNHRE, CNHIM                                 HTNT 660
      GO TO 220                                                            HTNT 670
  210 WRITE (6,30)  ( WIT(I), AVN(I), BVN(I), CVNR(I), CVNI(I),            HTNT 680
     1                I = 1, NWI )                                        HTNT 690
  220 WRITE (6,40)                                                         HTNT 700
      GO TO 240                                                            HTNT 710
  230 WRITE (6,50)                                                         HTNT 720
  240 DO 250 I = 1,NER                                                     HTNT 730
  250 WRITE (6,60)OMEGA(I),HR(I),HI(I)                                     HTNT 740
C                                                                          HTNT 750
  260 IF ( HRUN )              GO TO 350                                   HTNT 760
      DO 340 I=1,NER                                                       HTNT 770
      W = OMEGA(I)                                                         HTNT 780
      GO TO NT,(270,280)                                                   HTNT 790
  270 CALL  INT4  ( WIT, AVN , W, ANH   )                                  HTNT 800
      CALL  INT4  ( WIT, BVN , W, BNH   )                                  HTNT 810
      CALL  INT4  ( WIT, CVNR, W, CNHRE )                                  HTNT 820
      CALL  INT4  ( WIT, CVNI, W, CNHIM )                                  HTNT 830
  280 DEN = GAMMA*W                                                        HTNT 840
      X = ANH - CNHIM/DEN*XLON                                             HTNT 850
      Y = BNH / DEN * XLRN + CNHRE * XLON / DEN                            HTNT 860
      SQD = X * X + Y * Y                                                  HTNT 870
      HTR(I) = (X * HR(I) + Y * HI(I) ) /SQD                               HTNT 880
      HTI(I) = (X * HI(I) - Y * HR(I) ) / SQD                              HTNT 890
      CALL DVCHK (K000FX)                                                  HTNT 900
       GO TO (310,290),K000FX                                              HTNT 910
  290 IF (CD-10.0) 340,300,300                                             HTNT 920
  300 IF (I-1) 330,320,330                                                 HTNT 930
  310 C=10.0                                                               HTNT 940
  320 LIN=NER+6                                                            HTNT 950
      CALL PAGE (LIN)                                                      HTNT 960
      WRITE (6,70)                                                         HTNT 970
  330 WRITE (6,60)DOM(I),HTR(I),HTI(I)                                     HTNT 980
  340 CONTINUE                                                             HTNT 990
      GO TO 370                                                            HTNT1000
C                                                                          HTNT1010
  350 DO 360 I = 1,NER                                                     HTNT1020
      HTI(I) = HI(I)                                                       HTNT1030
  360 HTR(I) = HR(I)                                                       HTNT1040
  370 JOMEG1 = 0                                                           HTNT1050
      JOMEG2=0                                                             HTNT1060
      IF ( CD .LE. 99.0 )      CALL  PAGE  (60)                            HTNT1065
      DO 390 I =1,NER                                                      HTNT1070
      IF (HTR(I)) 390,390,380                                              HTNT1080
  380 JOMEG1 = I                                                           HTNT1090
      GO TO 410                                                            HTNT1100
  390 CONTINUE                                                             HTNT1110
      IF (JOMEG1)400,400,410                                               HTNT1120
  400 WRITE (6,80)                                                         HTNT1130
      ERR= -1.0                                                            HTNT1140
      GO TO 520                                                            HTNT1150
  410 DO 430 J =I,NER                                                      HTNT1160
      IF (HTR(J)) 420,430,430                                              HTNT1170
  420 JOMEG2 = J                                                           HTNT1180
      GO TO 440                                                            HTNT1190
```

```
430 CONTINUE                                                          HTNT1200
    JOMEG2 =NER                                                       HTNT1210
440 DLTMEG = (DOM(JOMEG2) -DOM(JOMEG1))/ 39.0                         HTNT1220
    L=NER+1                                                           HTNT1230
    HTI(L)=0.0                                                        HTNT1240
    HTR(L)=0.0                                                        HTNT1250
    DOM(L)=0.0                                                        HTNT1260
    OMGA(1) =DOM(JOMEG1)                                              HTNT1270
    DO 490 I=1,40                                                     HTNT1280
    CALL INT4 (DOM(1),HTR(1),OMGA(I),HTRINT(I) )                      HTNT1290
    CALL INT4 (DOM(1),HTI(1),OMGA(I),HTIINT(I) )                      HTNT1300
    IF (CD-10.0)480,450,450                                           HTNT1310
450 IF ( I-1 )   470,460,470                                          HTNT1320
460 IF ( .NOT. HRUN )    CALL  PAGE  ( 60 )                           HTNT1330
    WRITE (6,90)                                                      HTNT1340
    WRITE (6,100)                                                     HTNT1350
470 WRITE (6,60) OMGA(I),HTRINT(I),HTIINT(I)                          HTNT1360
480 OMGA(I+1) = OMGA(I) + DLTMEG                                      HTNT1370
490 CONTINUE                                                          HTNT1380
    DO 500 I=1,139                                                    HTNT1390
500 DOUT (I) = B(I)                                                   HTNT1400
    IF(C) 510,520,510                                                 HTNT1410
510 NER=0                                                             HTNT1420
520 RETURN                                                            HTNT1430
    END                                                               HTNT1440
```

```
$IBMAP *ADMIN                                                          *ADM0010
* GLAUZ - ADAMS METHOD OF INTEGRATION                                   *ADM0020
* FAP TO MAP CONVERSION HAZLETT, DEC 1963 , FORTRAN 4 PATTERSON JULY 64 *ADM0030
        ENTRY   ADMSET                                                 *ADM0040
        ENTRY   ADMINT                                                 *ADM0050
        ENTRY   ADMCOR                                                 *ADM0060
        ENTRY   ADMPAR                                                 *ADM0070
        ENTRY   ADMRES                                                 *ADM0080
                                                                       *ADM0090
ADMSET  SAVE    1                                                      *ADM0100
        CLA*    3,4                                                    *ADM0110
        STA     BZ              N TO ADD  OF BZ                        *ADM0120
        ALS     2               4N                                     *ADM0130
        STA     BP18    SAVE 4N, SET FLAG FOR RETURN                   *ADM0140
        ADD*    3,4             +N                                     *ADM0150
        STA     CF              5N                                     *ADM0160
        ADD     7,4                 PUT IN                             *ADM0170
        ADD     BP18        +4N                                        *ADM0180
        STA     CC                  PUT IN    DIFF TABLE LOC           *ADM0190
        CLA     4,4             F FUNCTION LOCATION                    *ADM0200
        ADD*    3,4             +N                                     *ADM0210
        STA     LF              FUNCTION VALUE LOC                     *ADM0220
        CLA     5,4             DERIV LOC                              *ADM0230
        ADD*    3,4             +N                                     *ADM0240
        STA     LD              DERIV VALUE LOC                        *ADM0250
        CLA     6,4             PARTIAL STEP LOC                       *ADM0260
        ADD*    3,4             +N                                     *ADM0270
        STA     CP              PARTIAL STEP LOC                       *ADM0280
        CLA     7,4                                                    *ADM0290
        ADD*    3,4             +N                                     *ADM0300
        STA     LG              TEST VALUE LOC.     7,4 WAS PUT IN     *ADM0310
        ADD*    3,4             +N                                     *ADM0320
        STA     CA              ACCURACY EXPONENT LOC                  *ADM0330
        ADD*    3,4             +N                                     *ADM0340
        STA     CK              OLD FCN. LOC.                          *ADM0350
        ADD*    3,4                                                    *ADM0360
        STA     CQ                                                     *ADM0370
        CLA     8,4                                                    *ADM0380
        STA     CX              X LOC                                  *ADM0390
        CLA     9,4                                                    *ADM0400
        STA     CH              H LOC                                  *ADM0410
        CLA     10,4                                                   *ADM0420
        ADD*    3,4             +N                                     *ADM0430
        STA     CD              ACCURACY INPUT TABLE                   *ADM0440
        TRA     BP20                                                   *ADM0450
ADMRES  SAVE    1                                                      *ADM0460
        STZ     BP18                                                   *ADM0470
BP20    STZ     FLAG            +N                                     *ADM0480
CD      CAL     *,4             ACCURACY INPUT,4                       *ADM0490
        ANA     =0377000000000                                         *ADM0500
        TNZ     *+2             TEST FOR 0 ACCURACY INPUT              *ADM0510
        CLA     =0152000000000  ACCURACY SET= +152                     *ADM0520
        ADD     =0022000000000                                         *ADM0530
CA      STO     *,4             ACCURACY EXPONET,4                     *ADM0540
        TIX     CD,4,1                                                 *ADM0550
        LXA     CF,1            +5N                                    *ADM0560
BD      STZ*    CC              DIFF TABLE,1                           *ADM0570
        TIX     BP,1,1                                                 *ADM0580
        AXT     5,1                                                    *ADM0590
        SXD     CNT,1                                                  *ADM0600
        CLA     BP18                                                   *ADM0610
        TNZ     BP19                                                   *ADM0620
        RETURN  ADMRES                                                 *ADM0630
BP19    RETURN  ADMSET                                                 *ADM0640
BP18    PZE                                                            *ADM0650
ADMINT  SAVE                                                           *ADM0660
        CLA     FLAG                                                   *ADM0670
        TNZ     BZ                                                     *ADM0680
        RETURN  ADMINT                                                 *ADM0690
BZ      AXT     *,4             +N                                     *ADM0700
BP2     CLA*    LF              FUNCTION,4                             *ADM0710
CK      STO     *,4             OLD FUNCTION,4                         *ADM0720
        TIX     BP2,4,1                                                *ADM0730
BF      AXT     COEFP,4         PRED TABLE LOC                         *ADM0740
        SXA     CO,4                                                   *ADM0750
        TSX     COMP,4                                                 *ADM0760
CX      CLA     *               X                                      *ADM0770
CH      FAD     *               H                                      *ADM0780
        STO*    CX              STORE IN X                             *ADM0790
        RETURN  ADMINT                                                 *ADM0800
COMP    SXA     IR1,1                                                  *ADM0810
        SXA     IR2,2                                                  *ADM0820
        SXA     IR4,4                                                  *ADM0830
        LXA     BZ,4            N TO IN 4                              *ADM0840
CF      AXT     *,1             5N   IN 1                              *ADM0850
CB      AXT     5,2                                                    *ADM0860
        STZ     TEMP                                                   *ADM0870
CC      LDQ     *,1             DIFF TABLE,1                           *ADM0880
CO      FMP     *,2             COEF,2                                 *ADM0890
        FAD     TEMP                                                   *ADM0900
        STO     TEMP                                                   *ADM0910
        TXI     BP3,1,-1        NEXT DIFF                              *ADM0920
BP3     TIX     CC,2,1          NEXT COEF                              *ADM0930
        AXT     0,2                                                    *ADM0940
CD      LDQ     *,4             DERIV,4                                *ADM0950
        FMP*    CO              COEF,2                                 *ADM0960
        FAD     TEMP                                                   *ADM0970
        LRS     35                                                     *ADM0980
        FMP*    CH              H                                      *ADM0990
LG      STO     *,4             TEST VALUE                             *ADM1000
CCM     FAD*    CK              OLD FUNCTION                           *ADM1010
CM      STO*    LF              FUNCTION,4                             *ADM1020
        TIX     CB,4,1          NEXT EQUATION                          *ADM1030
TRA     AXT     *,4                                                    *ADM1040
IR2     AXT     *,2                                                    *ADM1050
IR1     AXT     *,1                                                    *ADM1060
        TRA     1,4                                                    *ADM1070
ADMCOR  SAVE    1,2                                                    *ADM1080
        CLA     FLAG                                                   *ADM1090
        TZE     FIRST                                                  *ADM1100
        STD     TT              0 TO DECR TT                           *ADM1110
        LXA     BZ,4            N IN 4                                 *ADM1120
DA      CLA*    LG              TEST VALUE,4                           *ADM1130
CQ      STO     *,4             PREDICTOR TEST VALUE,4                 *ADM1140
        TIX     DA,4,1                                                 *ADM1150
        AXT     COEFC,4         CORRECTOR TABLE LOC                    *ADM1160
        SXA     CO,4                                                   *ADM1170
        TSX     COMP,4                                                 *ADM1180
        LXA     BZ,4            N TO IN 4                              *ADM1190
LF      CAL     *,4             FUNCTION,4                             *ADM1200
        ANA     =0377000000000  KEEP EXP ONLY                          *ADM1210
```

```
         SUB     =0002000000000    SHIFT EXP                          *ADM1220
         UFA*    L6                TEST VALUE.4                       *ADM1230
         UFS*    CQ                DEL YC - DEL YP                    *ADM1240
         SSP                                                          *ADM1250
         UFA*    CA                                                   *ADM1260
         ANA     =0000777777776    DOUBLING TEST 0 DOUBLE             *ADM1270
         TZE     BP4                                                  *ADM1280
         SXD     TT,4              NO DOUBLE FLAG OVER 0              *ADM1290
BP4      ANA     =0000777777600    HAVING TEST 0 NO HALVE             *ADM1300
         TNZ     HALV              NO ZERO HALVE                      *ADM1310
DE       TIX     LF,4,1                                               *ADM1320
         LXA     BZ,4              +N                                 *ADM1330
         LXD     CNT,1                                                *ADM1340
         TXL     BP5,1,0                                              *ADM1350
         TXI     BP4,1,-1          REDUCE CNT BY 1                    *ADM1360
BP6      SXD     CNT,1                                                *ADM1370
BP5      LXA     CF,1              SN                                 *ADM1380
LP       AXT     9,2                                                  *ADM1390
         LDQ*    LD                DERIV,4                            *ADM1400
CPR      CLS*    CC                DIFF TABLE,1                       *ADM1410
         STQ*    CC                DIFF TABLE,1                       *ADM1420
         FAD*    CC                                                   *ADM1430
         LRS     35                                                   *ADM1440
CNT      TXH     BP7,2,*                                              *ADM1450
         LDQ     COEFP             0.                                 *ADM1460
BP7      TXI     BP8,1,-1          NEXT DIFF                          *ADM1470
BP8      TIX     CPR,2,1                                              *ADM1480
         TIX     LP,4,1                                               *ADM1490
TT       TXL     OUT,4,*           ** ZERO DOUBLE                     *ADM1500
         AXT     TDBL,4                                               *ADM1510
         SXA     TY,4                                                 *ADM1520
         TSX     MAT,4                                                *ADM1530
         LDQ*    CH                H                                  *ADM1540
         FMP     THAL+1            2.0                                *ADM1550
         STO*    CH                H                                  *ADM1560
OUT      RETURN  ADMCOR                                               *ADM1570
HALV     AXT     THAL,4            HAVING TABLE                       *ADM1580
         SXA     TY,4                                                 *ADM1590
         TSX     MAT,4                                                *ADM1600
         CLA*    CX                X                                  *ADM1610
         FSB*    CH                H                                  *ADM1620
         STO*    CX                X BACKED UP                        *ADM1630
         LDQ*    CH                H                                  *ADM1640
         FMP     TPBL              .5                                 *ADM1650
         STO*    CH                NEW H                              *ADM1660
         TSX     IR2,4             RESTORE IR1,IR2 DESTROYED BY MAT   *ADM1670
         TRA     BF                                                   *ADM1680
FIRST    STL     FLAG              FLAG NOT = ZERO                    *ADM1690
         SXA     IR1F,1                                               *ADM1700
         LXA     BZ,4              N                                  *ADM1710
         LXA     CF,1              SN                                 *ADM1720
BP10     CLA*    LD                DERIV,4                            *ADM1730
         STO*    CC                DIFF TABLE,1                       *ADM1740
         TXI     *+1,1,-5                                             *ADM1750
BP9      TIX     BP10,4,1                                             *ADM1760
IR1F     AXT     *,1                                                  *ADM1770
         TRA     BZ                                                   *ADM1780
MAT      LXA     CF,1              SN                                 *ADM1790
         SXA     IR4N,4                                               *ADM1800
TW       AXT     4,4               4                                  *ADM1810
         AXT     9,2               9                                  *ADM1820
TV       SXD     TU,4              STORE IN4 INSHIFT LOC              *ADM1830
         TXI     BP11,1,-1         MOVE PAST Y OR PAST DIFF.          *ADM1840
BP11     STZ     TEMP                                                 *ADM1850
TX       LDQ*    CC                DIFF TABLE,1                       *ADM1860
TY       FMP     *,2               MAT COEF,2                         *ADM1870
         FAD     TEMP                                                 *ADM1880
         STO     TEMP                                                 *ADM1890
         TXI     BP12,1,-1         MOVE TO NEXT DIFF                  *ADM1900
BP12     TXI     BP14,2,-1         MOVE TO NEXT COEF                  *ADM1910
BP14     TIX     TX,4,1            GO FOR MORE TERMS                  *ADM1920
TU       TXI     TZ,1,*            MOVE BACK TO ORIG DIFF             *ADM1930
TZ       STO*    CC                DIFF TABLE,1                       *ADM1940
         LXD     TU,4                                                 *ADM1950
         TIX     TV,4,1                                               *ADM1960
         TIX     TW,1,1            MOVE TO Y TERM OR ALL THROUGH      *ADM1970
IR4N     AXT     *,4                                                  *ADM1980
         TRA     1,4                                                  *ADM1990
ADMPAR   SAVE                                                         *ADM2000
         SXA     IR2,2                                                *ADM2010
         SXA     IR1,1                                                *ADM2020
         CLA*    3,4                                                  *ADM2030
         FSB*    CX                XP-X                               *ADM2040
         FDP*    CH                XP-X /H =P                         *ADM2050
         STQ     TEMPA-5           P TO TEMPA-5                       *ADM2060
         STZ     TEMPA                                                *ADM2070
         AXT     -4,4              GENERATE POWERS OF P               *ADM2080
BP16     FMP     TEMPA-5                                              *ADM2090
         STO     TEMPB-4,4                                            *ADM2100
         LRS     35                                                   *ADM2110
         TXI     BP15,4,1                                             *ADM2120
BP15     TXH     BP16,4,0                                             *ADM2130
         AXT     9,1                                                  *ADM2140
         AXT     CPP,4                                                *ADM2150
         SXA     TX,4                                                 *ADM2160
         SXA     TZ,4                                                 *ADM2170
         AXT     TPBL,4                                               *ADM2180
         SXA     TY,4                                                 *ADM2190
         TSX     MAT+1,4           AVOIDS SN TO IN1                   *ADM2200
         AXT     CC,4                                                 *ADM2210
         SXA     TX,4                                                 *ADM2220
         SXA     TZ,4                                                 *ADM2230
         AXT     1,1                                                  *ADM2240
         AXT     4,2                                                  *ADM2250
CPP      CLA     TEMPB+1,1                                            *ADM2260
         STO     TEMPA,2                                              *ADM2270
         TXI     BP17,1,1                                             *ADM2280
BP17     TIX     CPP,2,1                                              *ADM2290
         AXT     TEMPA,4                                              *ADM2300
         SXA     CO,4                                                 *ADM2310
         AXT     LF,4                                                 *ADM2320
         SXA     CCM,4                                                *ADM2330
         AXT     CP,4                                                 *ADM2340
         SXA     CM,4                                                 *ADM2350
         TSX     COMP+2,4                                             *ADM2360
         AXT     LF,4                                                 *ADM2370
         SXA     CM,4                                                 *ADM2380
         AXT     CK,4                                                 *ADM2390
         SXA     CCM,4                                                *ADM2400
         RETURN  ADMPAR                                               *ADM2410
CP       PZE     0,4                                                  *ADM2420
```

```
FLAG  PZE                                                                  *ADM2430
      DEC    1.                  1                                         *ADM2440
      DEC    .5                  1/2                                       *ADM2450
      OCT    177652525253        .4166666667  5/12                         *ADM2460
      DEC    .375                3/8                                       *ADM2470
      OCT    177544764477        .3486111111  251/720                      *ADM2480
COEFP DEC    0.                                                            *ADM2490
      OCT    200515405541        .651388889   469/720                      *ADM2500
      OCT    176466026603        .151388889   109/720                      *ADM2510
      DEC    .0680555556                        49/720                      *ADM2520
      OCT    173660266027        .026388889     19/720                      *ADM2530
      DEC    0.                  .00                                       *ADM2540
COEFC OCT    177544764477        .348611111     251/720                     *ADM2550
      DEC    .00833333333                       6/720                       *ADM2560
      DEC    .0625                              45/720 =1/16                *ADM2570
      DEC    .152777778                         110/720                     *ADM2580
      DEC    .125                               90/720 =1/8                 *ADM2590
      DEC    .0416666667                        1/24                        *ADM2600
      DEC    .166666667                         1/6                         *ADM2610
      DEC    .166666667                         1/6                         *ADM2620
      DEC    .166666667                         1/6                         *ADM2630
      DEC    .25                                1/4                         *ADM2640
TPBL  DEC    .5                                                            *ADM2650
      DEC    .125                                                          *ADM2660
      DEC    .0625                                                         *ADM2670
      DEC    .0390625                                                      *ADM2680
      DEC    .25                                                           *ADM2690
      DEC    .125                                                          *ADM2700
      DEC    .078125                                                       *ADM2710
      DEC    .125                                                          *ADM2720
      DEC    .09375                                                        *ADM2730
THAL  DEC    .0625                                                         *ADM2740
      DEC    2.                                                            *ADM2750
      DEC    -1.                                                           *ADM2760
      DEC    0                                                             *ADM2770
      DEC    0                                                             *ADM2780
      DEC    4.                                                            *ADM2790
      DEC    -4.                                                           *ADM2800
      DEC    1.                                                            *ADM2810
      DEC    8.                                                            *ADM2820
      DEC    -12.                                                          *ADM2830
TDBL  DEC    16.                                                           *ADM2840
TEMP  BSS    11                                                            *ADM2850
TEMPA SYN    TEMP+6                                                        *ADM2860
TEMPB SYN    TEMP+10                                                       *ADM2870
      END                                                                  *ADM2880
```

```
$IBFTC NOZMIT  LIST,M94                                                         NOZM
      SUBROUTINE CCC(DIN,DOUT,WC,CODE,NER)                                      NOZM  10
C*************************************************************************NOZM  20
C***** THIS PROGRAM WAS WRITTEN FROM A REPORT ON NOZZLE ADMITTANCE******NOZM  30
C***** THEORY FROM PRINCETON UNIVERSITY.  THE ANALYSIS WAS DONE BY******NOZM  40
C***** CARL LUNDELIUS AND THE PROGRAMMING BY JERRY HOWARD,JOB 8052******NOZM  50
C*************                                                             NOZM  60
C     NOZMIT MODIFIED 25 JUL 67  TO SUPPLY CR1,CI1 IN PLACE OF BR1,BI1. NOZM  70
C*************************************************************************NOZM  80
C                                                                           NOZM  90
      LOGICAL  LOGIK,  SL1,  SL2,  EORJ                                     NOZM 100
      COMMON  /ABCDF/  EXTRA(100),  ABLOK(600)                              NOZM 110
     1      ,  XX     ,  U2TBL  ,  DESIRE ,  RAT    ,  RAC    ,  RCC      NOZM 120
     2      ,  RCT    ,  ALFA   ,  G      ,  KN     ,  Y      ,  YP       NOZM 130
     3      ,  YOUT   ,  TEMP   ,  E      ,  XTABLE ,  YTABLE ,  A        NOZM 140
     4      ,  R      ,  AM     ,  AP     ,  AMP    ,  ZZ     ,  AMM      NOZM 150
     5      ,  AMP2   ,  CALFA  ,  CTALFA ,  DELAM  ,  DELTZ  ,  FKN      NOZM 160
     6      ,  G1     ,  G2     ,  G3     ,  G4     ,  JPLAG1 ,  KMM1     NOZM 170
     7      ,  K      ,  NN     ,  PI     ,  PROD   ,  RSTA1  ,  RSTA2    NOZM 180
     8      ,  SALFA  ,  T1     ,  T2     ,  T3     ,  XINT   ,  XK       NOZM 190
     9      ,  ZZ1    ,  ZZ2    ,  ZZ3    ,  A1     ,  ABC    ,  ABD      NOZM 200
      COMMON  /ABCDF/                                                       NOZM 210
     1         AII    ,  ALPHAI ,  ALPHAR ,  AR1    ,  B101   ,  B102     NOZM 220
     2      ,  B10    ,  B1     ,  B2     ,  B3     ,  B4     ,  B5       NOZM 230
     3      ,  B6     ,  B7     ,  B8     ,  B91    ,  B92    ,  B9       NOZM 240
     4      ,  BI1    ,  BR1    ,  C2     ,  C3     ,  CMII   ,  CMIR     NOZM 250
     5      ,  CI1    ,  CR1    ,  C      ,  D10    ,  D11    ,  D1       NOZM 260
     6      ,  D2     ,  D3     ,  D4     ,  D5     ,  D6     ,  D7       NOZM 270
     7      ,  D8     ,  D9     ,  DC2    ,  D      ,  DU2    ,  EI       NOZM 280
     8      ,  ER     ,  F3I    ,  F3R    ,  FI     ,  FR     ,  H1       NOZM 290
     9      ,  H      ,  I      ,  IWO    ,  IW     ,  IWW    ,  J        NOZM 300
      COMMON  /ABCDF/                                                       NOZM 310
     1         MDESIR ,  NK     ,  NP     ,  S2     ,  S      ,  TT       NOZM 320
     2      ,  U2     ,  U      ,  W2     ,  W      ,  XI0I   ,  XI0R     NOZM 330
     3      ,  XI2I   ,  XI2R   ,  XI     ,  XJI    ,  XJR    ,  XMNEW    NOZM 340
     4      ,  XMOLD  ,  XNEW   ,  XOLD   ,  XPT    ,  X      ,  ZI       NOZM 350
     5      ,  ZR                                                          NOZM 360
      COMMON  /PROLOG/  LOGIK(50), SL1, SL2, EORJ                           NOZM 370
C                                                                           NOZM 380
      DIMENSION XX(200),U2TBL(200),XTABLE(200),YTABLE(200),ZZ(200)          NOZM 390
      DIMENSION  Y(8),YP(8),YOUT(8),TEMP(72),E(8)                           NOZM 400
      DIMENSION A(200),R(200),AM(200),AP(200),AMP(200)                      NOZM 410
      DIMENSION   DIN(1), DOUT(1),WC(1)                                     NOZM 420
C                                                                           NOZM 430
C*************************************************************************NOZM 440
C                                                                           NOZM 450
C                                                                           NOZM 460
      NER  =  0                                                             NOZM 470
C ***********                                                               NOZM 480
C READ INPUT*                                                               NOZM 490
C ***********                                                               NOZM 500
      G  =  DIN(1)                                                          NOZM 510
      NOMEG=WC(2)+2.0001                                                    NOZM 520
      MDESIR  =  DIN(2)  +  .0001                                           NOZM 530
      GEO=.5*(G+1.0)*SQRT(DIN(4)*DIN(7))                                    NOZM 540
      IF  (CODE)  10,20,30                                                  NOZM 550
   10 NER =  1                                                              NOZM 560
   20 RETURN                                                                NOZM 570
   30 IF(WC(1))40,50,40                                                     NOZM 580
   40 WCONST=DOUT(3)/(6.2831853*DOUT(1))                                    NOZM 590
      GEO=GEO/DOUT(1)                                                       NOZM 600
      GO TO 60                                                              NOZM 610
   50 WCONST=DOUT(3)/(6.2831853*DOUT(2))                                    NOZM 620
      GEO=GEO/DOUT(2)                                                       NOZM 630
   60 IF(CODE-99.0)100,100,70                                               NOZM 640
C ****************                                                          NOZM 650
C PRINT OUT INPUT*                                                          NOZM 660
C ****************                                                          NOZM 670
   70 CALL PAGE(5)                                                          NOZM 680
      WRITE (6,80)                                                          NOZM 690
   80 FORMAT (1H0,75H PROGRAM  C  INPUT - CALCULATES NOZZLE ADMITTANCE      NOZM 700
     1COEFFICIENTS USING 8052   )                                           NOZM 710
      WRITE (6,90)G,  MDESIR                                                NOZM 720
   90 FORMAT (1H0,5X,3HG =,F9.3,11H ,  MDESIR =,I2  )                       NOZM 730
  100 CONTINUE                                                              NOZM 740
C ***************************************************************         NOZM 750
C MDESIR=1,INPUT TABLE,INPUT DESIRE  MDESIR=2,CALCULATE TABLE,INPUT*        NOZM 760
C DESIRE  MDESIR=3,CALCULATE TABLE,CALCULATE DESIRE (AT LAST POINT)*        NOZM 770
C ***************************************************************         NOZM 780
      GO TO (150,110,110),MDESIR                                            NOZM 790
  110 RAT   =  DIN(4)                                                       NOZM 800
      RAC   =  DIN(5)                                                       NOZM 810
      RCC   =  DIN(6)                                                       NOZM 820
      RCT   =  DIN(7)                                                       NOZM 830
      ALFA  =  DIN(8)                                                       NOZM 840
      KN    =  DIN(9)  +  .0001                                             NOZM 850
      IF   (CODE  -  99.0)   140,140,120                                    NOZM 860
  120 CALL  PAGE (1)                                                        NOZM 870
      WRITE (6,130)RAT, RAC, RCC, RCT, ALFA, KN                             NOZM 880
  130 FORMAT  (1H ,5X5HRAT =,F7.3,6H,RAC =,F7.3,6H,RCC =,F7.3,6H,RCT =,     NOZM 890
     1   F7.3, 7H,ALFA = F7.3,5H,KN = I4   )                                NOZM 900
  140 CONTINUE                                                              NOZM 910
      CALL TBLCAL                                                           NOZM 920
      KN = KN/2 + 1                                                         NOZM 930
      GO TO 190                                                             NOZM 940
C ***************************************************                       NOZM 950
C READ VELOCITY POTENTIAL TABLE, FIRST POINT IS (0,1)*                      NOZM 960
C ***************************************************                       NOZM 970
  150 J = 10                                                                NOZM 980
      DO 170 I = 1,200                                                      NOZM 990
      I = I                                                                 NOZM1000
      XX(I) =  DIN(J)                                                       NOZM1010
      U2TBL(I)  =  DIN(J+1)                                                 NOZM1020
      J = J+2                                                               NOZM1030
      IF (I)  170,170,160                                                   NOZM1040
  160 IF ( XX(I) )   170,180,180                                            NOZM1050
  170 CONTINUE                                                              NOZM1060
C ***********************************************                           NOZM1070
C KN = COUNT OF TOTAL NO. OF POINTS IN THE TABLE.*                          NOZM1080
C ***********************************************                           NOZM1090
  180 KN = I - 1                                                            NOZM1100
  190 IF(CODE-199.0)240,240,200                                             NOZM1110
  200 CALL PAGE(70)                                                         NOZM1120
      WRITE (6,220)                                                         NOZM1130
      KKKN=KN/2+1                                                           NOZM1140
      DO 210 I=1,KKKN                                                       NOZM1150
      KKK=KKKN+I                                                            NOZM1160
      VOL1=SQRT(U2TBL(I))                                                   NOZM1170
      VOL2=SQRT(U2TBL(KKK))                                                 NOZM1180
      WRITE (6,230)I,ZZ(2*I-1),XX(I),VOL1,KKK,ZZ(2*KKK-1),XX(KKK),VOL2      NOZM1190
  210 CONTINUE                                                              NOZM1200
```

```
  220 FORMAT(//,40X, 25HVELOCITY POTENTIAL TABLE ,//,35X, 46HZ = AXIAL PNOZM1210
     1OSITION IN NOZZLE (INCHES)          ,//,35X,39HX = VELOCITY POTENNOZM1220
     2TIAL (NONDIMENSIONAL) ,//,35X, 69HV = AXIAL VELOCITY (UNDIMENSIONALNOZM1230
     3ZED BY SPEED OF SOUND AT THROAT)                                 NOZM1240
     4 ,///,5X,5HPOINT,11X,1HZ,16X,1HX,15X,1HV,16X,5HPOINT,11X,1HZ,16X,1HNOZM1250
     5X,16X,1HV,//,)                                                   NOZM1260
  230 FORMAT(6X,I3,6X,3(E12.5,5X),6X,I3,6X,2(E12.5,5X),E12.5,)         NOZM1270
  240 CONTINUE                                                         NOZM1280
      ************************************************               NOZM1290
      SE ORDER OF TABLE VALUES AND SET UP FOR INT4D*                   NOZM1300
      K = KN+1                                                         NOZM1310
      TABLE(NK) = 0.0                                                  NOZM1320
      TABLE(NK) = 0.0                                                  NOZM1330
      O 260 I = 1,KN                                                   NOZM1340
      K = NK - 1                                                       NOZM1350
      XTABLE(I) = XX(NK)                                               NOZM1360
      YTABLE(I) = U2TBL(NK)                                            NOZM1370
  260 CONTINUE                                                         NOZM1380
C                                                                      NOZM1390
      ********************                                             NOZM1400
      ONE CASE AT A TIME*                                              NOZM1410
      ***  ***********                                                 NOZM1420
      NW  = 410                                                        NOZM1430
      NO  = 2                                                          NOZM1440
      P   = DIN(3) + .0001                                             NOZM1450
      CODE   =  99.0)  290,290,270                                     NOZM1460
      NPR    = NP + 3                                                  NOZM1470
      NT     = NP  + 409                                               NOZM1480
      ALL    E (N*R)                                                   NOZM1490
      (I)    180)) DIN(I), I =  410, NPT  )                            NOZM1500
      ORMA   3,39X, 6X,4H  WN,12X,6H(SNH)N,10X,4H DES //               NOZM1510
             (40X,3E16.6 ))                                            NOZM1520
      RN     S                                                         NOZM1530
      F  CODE =  9.0)   340,340,310                                    NOZM1540
      ***********************                                          NOZM1550
       MC   AND OUTPUT SYMBOLS*                                        NOZM1560
      **   **  ***************                                         NOZM1570
      (1      17,)                                                     NOZM1580
      PA                                                               NOZM1590
      CO                                                               NOZM1600
      FI      23)                                                      NOZM1610
  320 ORMA    40, 39H PROGRAM  C  OUTPUT   )                           NOZM1620
      RITE (6,330)                                                     NOZM1630
  330 ORMAT(//4X,6H(SNH1C,5X2HWC,6X,7HMACH NO,9X,2HAR,14X,2HAI,14X,2HBRNOZM1640
     1AA,2HB1,14X,2HCR,14X,2HCI/4X,6H(SNH)N,5X2HWN,9X,1HG,6X,13H-AR/(MNOZM1650
     CH ,9X,13H-AI/(MACH NO),9X,2HT1,14X,2HT2,8X,13H-CR/(MACH NO),3NOZM1660
        CI/(MACH NO)//)                                                NOZM1670
      OR(TENUF                                                         NOZM1680
           1,NP                                                        NOZM1690
                                                                       NOZM1700
          ))                                                           NOZM1710
          ,360), MDESIR                                                NOZM1720
          IN(IWW+2)                                                    NOZM1730
                                                                       NOZM1740
                                                                       NOZM1750
     =0.0                                                              NOZM1760
                                                                       NOZM1770
                                                                       NOZM1780
                                                                       NOZM1790
                                                                       NOZM1800
     0                                                                 NOZM1810
     =1                                                                NOZM1820
                                                                       NOZM1830
                                                                       NOZM1840
                                                                       NOZM1850
                                                                       NOZM1860
          ***********************                                      NOZM1870
      IZE  EQUATIONS AT X=0.*                                          NOZM1880
      ***********************                                          NOZM1890
           R                                                           NOZM1900
                                                                       NOZM1910
                                                                       NOZM1920
          ,I),YP(I),YOUT(I),TEMP(I),X,M,E(I))                         NOZM1930
                                                                       NOZM1940
                                                                       NOZM1950
          1.0)+4.0*W2                                                  NOZM1960
          2                                                            NOZM1970
          (W-S2)-W2*(G-1.0))/B6                                        NOZM1980
          1.0+2.0*(W2-S2))/B6                                          NOZM1990
          (1.0+W2)-A)*B8*(1.0-A1*W)+.125*(G2-1.0)*(W2-S2)              NOZM2000
          7-B8*B8)+2.0*A1*W*B7*B8                                      NOZM2010
                                                                       NOZM2020
          3.0-B)*W*B7+B8*(A1*A1*A1+W2)+.125*(G-1.0)*W*(A1*A1-S2)NOZM2030
          B7-B8*B8)+2.0*A1*A1*B7*B8                                    NOZM2040
          0102)/B6                                                     NOZM2050
                                                                       NOZM2060
                                                                       NOZM2070
                                                                       NOZM2080
                                                                       NOZM2090
                                                                       NOZM2100
                                                                       NOZM2110
                                                                       NOZM2120
                                                                       NOZM2130
                                                                       NOZM2140
                                                                       NOZM2150
                                                                       NOZM2160
      (B6+W)/B7)                                                       NOZM2170
                                                                       NOZM2180
                                                                       NOZM2190
          =(G+1.0)*(G-1.0)/(C2*C3)                                     NOZM2200
                                                                       NOZM2210
    YP(4)=-W*(G+1.0)/(C2*C3)                                           NOZM2220
    YP(5)=(3+1.0)*(G+1.0)*S2*C2**(1.0/(G-1.0))/(4.0*C3)                NOZM2230
          (W2+1.0)*S2*C2**(1.0/(G-1.0))/C3                             NOZM2240
                                                                       NOZM2250
          0                                                            NOZM2260
  350 CALL ADMINT                                                      NOZM2270
      ***********************************                              NOZM2280
                 ,NP),1) POTENTIAL TABLE*                              NOZM2290
          ************************                                     NOZM2300
          (XTABLE(I),YTABLE(I),X,U2,DU2)                               NOZM2310
          0**(1.0/(G-1.0))                                             NOZM2320
                                                                       NOZM2330
                                                                       NOZM2340
          *DU2                                                         NOZM2350
      ************************************************                 NOZM2360
        AT  .01 AT-FAKE EQUATIONS 7 AND 8 UNTIL PAST*                  NOZM2370
      ************************************************                 NOZM2380
          .E-10                                                        NOZM2390
          -W(I)                                                        NOZM2400
      *DU2/C)                                                          NOZM2410
```

```
      B3=W*U2                                                                   NOZM2420
      B4=.25*(W2-U*C2**(G/(G-1.0))*S2)                                          NOZM2430
      B5=.25*((G-1.0)*U2*DU2*W)/C2                                              NOZM2440
C                                                                               NOZM2450
      ABD=Y(7)*Y(7)-Y( 8)*Y( 8)                                                 NOZM2460
      YP(7)=(B2*Y(7)-B3*Y( 8)-B4)/B1-ABD                                        NOZM2470
      YP( 8)=(B3*Y(7)+B2*Y( 8)+B5)/B1-2.0*Y(7)*Y( 8)                            NOZM2480
C                                                                               NOZM2490
  410 YP(1)=.5*(DU2-W*Y(2)/U2)                                                  NOZM2500
      YP(2)=.5*W*Y(1)/U2                                                        NOZM2510
      D1=-Y(3)*Y(7)+Y(4)*(Y( 8)-W*(.5/U2+2.0/((G+1.0)*(1.0-U2))))               NOZM2520
      D2=S2*C2**(1.0/(G-1.0))*Y(2)/(2.0*W*U)                                    NOZM2530
      D3=(-W*Y(2)/U2+DU2*(1.0+(G-1.0)*Y(1)/C2))/(2.0*C2)                        NOZM2540
      YP(3)=D1+D2+D3                                                            NOZM2550
C                                                                               NOZM2560
      D4=-Y(4)*Y(7)-Y(3)*(Y( 8)-W*(.5/U2+2.0/((G+1.0)*(1.0-U2))))               NOZM2570
      D5=-S2*C2**(1.0/(G-1.0))*U*((1.0-U2)/(2.0*U2)+Y(1)/U2)/(2.0*W)            NOZM2580
      D6=(W*Y(1)/U2+DU2*(G-1.0)*Y(2)/C2)/(2.0*C2)                               NOZM2590
      YP(4)=D4+D5+D6                                                            NOZM2600
C                                                                               NOZM2610
      D7=S2*C2**(1.0/(G-1.0))/(4.0*U)-Y(5)*Y(7)                                 NOZM2620
      D8=Y(6)*(Y( 8)-W*(.5/U2+2.0/((G+1.0)*(1.0-U2))))                          NOZM2630
      YP(5)=D7+D8                                                               NOZM2640
C                                                                               NOZM2650
      ABC=-Y(6)*Y(7)                                                            NOZM2660
      YP(6)=ABC-Y(5)*(Y( 8)-W*(.5/U2+2.0/((G+1.0)*(1.0-U2))))                   NOZM2670
C                                                                               NOZM2680
      CALL ADMCOR                                                               NOZM2690
C                                                                               NOZM2700
  420 XMNEW=U/C                                                                 NOZM2710
      XNEW=X                                                                    NOZM2720
C                                                                               NOZM2730
      IF(XMNEW-DESIRE)430,500,440                                               NOZM2740
C ***************************************************************************** NOZM2750
C IF OUR CALCULATED MACH NUMBER IS CLOSE ENOUGH TO DESIRE WE WILL STOP*         NOZM2760
C ***************************************************************************** NOZM2770
  430 IF(ABS(XMNEW-DESIRE)-1.E-5)500,500,470                                    NOZM2780
  440 IF(XMN-XX(KN))450,460,460                                                 NOZM2790
  450 XNEW = XX(KN)                                                             NOZM2800
      GO TO 500                                                                 NOZM2810
  460 XMOLD = XMNEW                                                             NOZM2820
      XOLD=XNEW                                                                 NOZM2830
      GO TO 380                                                                 NOZM2840
C ************************************************************              NOZM2850
C PASSED DESIRED MACH NUMBER                                      *             NOZM2860
C LINEAR INTERPOLATION TO GET X CORRESPONDING TO DESIRED MACH*                  NOZM2870
C ************************************************************              NOZM2880
  470 XPT=XOLD+(XNEW-XOLD)/(XMNEW-XMOLD)*(DESIRE-XMOLD)                         NOZM2890
      XOLD = XNEW                                                               NOZM2900
      XMOLD = XMNEW                                                             NOZM2910
      XNEW = XPT                                                                NOZM2920
      CALL INT4(XTABLE(1),YTABLE(1),XNEW,U2)                                    NOZM2930
      C2 = .5*(G+1.0-U2*(G-1.0))                                                NOZM2940
      C = SQRT(C2)                                                              NOZM2950
      U = SQRT(U2)                                                              NOZM2960
      XMNEW = U/C                                                               NOZM2970
      I = I+1                                                                   NOZM2980
      IF(I-15)430,480,480                                                       NOZM2990
  480 WRITE (6,490)                                                             NOZM3000
  490 FORMAT(72H0 ITERATION SCHEME DOES NOT CONVERGE AFTER 10 ITERATIONS,       NOZM3010
     1, SEE PROGRAMMER)                                                         NOZM3020
      GO TO 10                                                                  NOZM3030
  500 CALL ADMPAR(XNEW)                                                         NOZM3040
C                                                                               NOZM3050
C                                                                               NOZM3060
C ************************************************************              NOZM3070
C COMPUTE ADMITTANCE COEFFICIENTS AND PRINT FINAL RESULTS*                      NOZM3080
C ************************************************************              NOZM3090
  510 CALL INT4D (XTABLE(1),YTABLE(1),XNEW,U2,DU2)                              NOZM3100
  520 C2=.5*(G+1.0-U2*(G-1.0))                                                  NOZM3110
      C=SQRT(C2)                                                                NOZM3120
      U=SQRT(U2)                                                                NOZM3130
C                                                                               NOZM3140
      DC2=-.5*(G-1.0)*DU2                                                       NOZM3150
      D=SQRT(2.0/(G+1.0))*U*C2/((C2/(.5*(G+1.0)))**(1.0*G/(G-1.0)))            NOZM3160
      D9=(1.0-U2)*(G+1.0)                                                       NOZM3170
      F3R=YOUT(1)/C2                                                            NOZM3180
      F3I=YOUT(2)/C2                                                            NOZM3190
      XI2R=2.0*YOUT(3)/D9                                                       NOZM3200
      XI2I=2.0*YOUT(4)/D9                                                       NOZM3210
      XI0R=2.0*YOUT(5)/D9                                                       NOZM3220
      XI0I=2.0*YOUT(6)/D9                                                       NOZM3230
      ZR=YOUT(7)                                                                NOZM3240
      ZI=YOUT( 8)                                                               NOZM3250
      ER=C2*XI0R-ZR                                                             NOZM3260
      EI=C2*XI0I-ZI                                                             NOZM3270
      FR=U2*C2*XI0R-ZR*U2                                                       NOZM3280
      FI=U2*C2*XI0I-ZI*U2-.5*W                                                  NOZM3290
      D10=FR*FR+FI*FI                                                           NOZM3300
      AR1= D*(ER*FR+EI*FI)/D10                                                  NOZM3310
      AI1= D*(EI*FR-ER*FI)/D10                                                  NOZM3320
      IF(S)540,530,540                                                          NOZM3330
  530 G1=W*C2*SQRT(U/(C2**(1.0/(G-1.0))))                                       NOZM3340
      GO TO 550                                                                 NOZM3350
  540 G1=W*C2*SQRT(U/(C2**(1.0/(G-1.0))))/S                                     NOZM3360
  550 BR1= G1*(-FR*XI0I+FI*XI0R)/D10                                            NOZM3370
      BI1= G1*(FR*XI0R+FI*XI0I)/D10                                             NOZM3380
      H1=U*C2*SQRT(2.0/(G+1.0))                                                 NOZM3390
      XJR=F3R*ZR-F3I*ZI+.5*(1.0-U2)*XI0R+.5*W*XI2I                              NOZM3400
      XJI=F3I*ZR+F3R*ZI+.5*(1.0-U2)*XI0I-.5*W*XI2R                              NOZM3410
      CR1 = H1*(XJR*FR+XJI*FI)/D10                                              NOZM3420
      CI1 = H1*(XJI*FR-XJR*FI)/D10                                              NOZM3430
C                                                                               NOZM3440
  560 ALPHAR = -AR1/DESIRE                                                      NOZM3450
      ALPHAI = -AI1/DESIRE                                                      NOZM3460
      CHIR = -CR1/DESIRE                                                        NOZM3470
      CHII = -CI1/DESIRE                                                        NOZM3480
      TT = (W/(S*SQRT(.5*(G+1.0))))/SQRT(U*(.5*(G+1.0)-U2*(G-1.0)/2.0)**NOZM3490
     1( 1.0/(G-1.0)))                                                           NOZM3500
      T1 = AR1*TT - BI1                                                         NOZM3510
      T2 = AI1*TT + BR1                                                         NOZM3520
C                                                                               NOZM3530
C ***************************                                                 NOZM3540
C  CASE IS COMPLETED                                                            NOZM3550
C ***************************                                                 NOZM3560
C                                                                               NOZM3570
C  FOR S=0  ADM COEF ARE ALPHA FOR 8005  LONGITUDINAL                           NOZM3580
C                                                                               NOZM3590
C  FOR S=N  ADM COEF ARE  T    FOR  993  TRANSVERSE                            NOZM3600
C                                                                               NOZM3610
      IF(S)580,570,580                                                          NOZM3620
```

```
  570 DOUT(IWO+1)=ALPHAR                                                NOZM3630
      DOUT(IWO+101)=ALPHAI                                              NOZM3640
      DOUT(IWO)=W/GEO                                                   NOZM3650
      DOUT(IWO+100)=W/GEO                                               NOZM3660
      GO TO 590                                                         NOZM3670
  580 CONTINUE                                                          NOZM3680
      DOUT(IW+19)=W/GEO                                                 NOZM3690
      DOUT(IW+49)=T1                                                    NOZM3700
      DOUT(IW+79)=T2                                                    NOZM3710
      DOUT(IW+109) = CR1                                                NOZM3720
      DOUT(IW+139) = CI1                                                NOZM3730
  590 IWO =IWO+2                                                        NOZM3740
      IF  ( CODE  -  9.0)     660,660,600                               NOZM3750
  600 CONTINUE                                                          NOZM3760
      KKKN=(2*IW)+1                                                     NOZM3770
      IF(NOMEG-KKKN)610,620,620                                         NOZM3780
  610 KKKN=KKKN-1                                                       NOZM3790
  620 KCOUNT=KCOUNT+4                                                   NOZM3800
      IF(KCOUNT-KPAGE)640,640,630                                       NOZM3810
  630 CALL PAGE(70)                                                     NOZM3820
      WRITE (6,330)                                                     NOZM3830
      KCOUNT=0                                                          NOZM3840
      KPAGE=48                                                          NOZM3850
C ******************                                                    NOZM3860
C PRINT FINAL RESULTS*                                                  NOZM3870
C ******************                                                    NOZM3880
  640 WRITE (6,650)WC(1),WC(KKKN),DESIRE,AR1,AI1,BR1,BI1,CR1,CI1,S,W,G,ANOZM3890
      LPHAR,ALPHAI,T1,T2,CHIR,CHII                                      NOZM3900
  650 FORMAT(2(3X,F7.4,2X,F7.4,3X,F7.4,6E16.5/))                        NOZM3910
      FCCPS=(WCONST*WC(KKKN))*12.0                                      NOZM3920
      WRITE (6,670)FCCPS                                                NOZM3930
  660 CONTINUE                                                          NOZM3940
  670 FORMAT(4X,8HFC(CPS)=F10.4//)                                      NOZM3950
      DOUT(205)=DESIRE                                                  NOZM3960
      IF(S) 690,680,690                                                 NOZM3970
  680 DOUT(1)=NP                                                        NOZM3980
      DOUT(101)=NP                                                      NOZM3990
      RETURN                                                            NOZM4000
      DOUT(16)=NP                                                       NOZM4010
      DOUT(NP+21)=0.0                                                   NOZM4020
      DOUT(NP+41)=0.0                                                   NOZM4030
      DOUT(NP+81)=0.0                                                   NOZM4040
      DOUT(NP+111)=0.0                                                  NOZM4050
      DOUT(NP+141)=0.0                                                  NOZM4060
      RETURN                                                            NOZM4070
      END                                                               NOZM4080
```

```
$IBFTC VELPOT  LIST,M94                                                          VELP
      SUBROUTINE TBLCAL                                                          VELP  10
C TBLCAL SUBROUTINE CALCULATES XX VS U2TBL FROM NOZZLE GEOMETRY                  *VELP  20
C SIMPSONS RULE IS USED WITH KN INPUT ODD AND CHANGED TO KN/2+1 IN MAIN*VELP  30
C                                                                                VELP  40
      LOGICAL  LOGIK, SL1, SL2, EORJ                                             VELP  50
      COMMON  /PROLOG/  LOGIK(50), SL1, SL2, EORJ                                VELP  60
C                                                                                VELP  70
      COMMON  /ABCDF/  EXTRA(100),  ABLOK(600)                                   VELP  80
     1      , XX     , U2TBL  , DESIRE , RAT    , RAC'   , RCC                   VELP  90
     2      , RCT    , ALFA   , G      , KN     , Y      , YP                    VELP 100
     3      , YOUT   , TEMP   , E      , XTABLE , YTABLE , A                     VELP 110
     4      , R      , AM     , AP     , AMP    , ZZ     , AMM                   VELP 120
     5      , AMP2   , CALFA  , CTALFA , DELAM  , DELTZ  , FKN                   VELP 130
     6      , G1     , G2     , G3     , G4     , JFLAG1 , KNM1                  VELP 140
     7      , K      , NN     , PI     , PROD   , RSTA1  , RSTA2                 VELP 150
     8      , SALFA  , T1     , T2     , T3     , XINT   , XK                    VELP 160
     9      , ZZ1    , ZZ2    , ZZ3    , A1     , ABC    , ABD                   VELP 170
      COMMON  /ABCDF/                                                            VELP 180
     1        AI1    , ALPHAI , ALPHAR , AR1    , B101   , B102                  VELP 190
     2      , B10    , B1     , B2     , B3     , B4     , B5                    VELP 200
     3      , B6     , B7     , B8     , B91    , B92    , B9                    VELP 210
     4      , BI1    , BR1    , C2     , C3     , CHII   , CHIR                  VELP 220
     5      , CI1    , CR1    , C      , D10    , D11    , D1                    VELP 230
     6      , D2     , D3     , D4     , D5     , D6     , D7                    VELP 240
     7      , D8     , D9     , DC2    , D      , DU2    , EI                    VELP 250
     8      , ER     , F3I    , F3R    , FI     , FR     , H1                    VELP 260
     9      , H      , I      , IWO    , IW     , IWW    , J                     VELP 270
      COMMON  /ABCDF/                                                            VELP 280
     1        MDESIR , MK     , MP     , SS     , S      , TT                    VELP 290
     2      , U2     , U      , W2     , W      , XIOI   , XIOR                  VELP 300
     3      , XI2I   , XI2R   , XI     , XJI    , XJR    , XMNEW                 VELP 310
     4      , XMOLD  , XNEW   , XOLD   , XPT    , X      , ZI                    VELP 320
     5      , ZR                                                                VELP 330
C                                                                                VELP 340
      DIMENSION XX(200),U2TBL(200),XTABLE(200),YTABLE(200),ZZ(200)               VELP 350
      DIMENSION  Y(8),YP(8),YOUT(8),TEMP(72),E(8)                                VELP 360
      DIMENSION A(200),R(200),AM(200),AP(200),AMP(200)                           VELP 370
C                                                                                VELP 380
C                                                                                VELP 390
      FKN = KN                                                                   VELP 400
      KNM1 = KN - 1                                                              VELP 410
      DELAM = 1.0/(FKN+1.0)                                                      VELP 420
      PI = 3.1415927                                                             VELP 430
      ZZ(1)= 0.0                                                                 VELP 440
C                                                                                VELP 450
      DO 10 J = 1,200                                                            VELP 460
      ZZ(J) = 0.0                                                                VELP 470
      A(J) = 0.0                                                                 VELP 480
      R(J) = 0.0                                                                 VELP 490
      AMP(J) = 0.0                                                               VELP 500
      AM(J) = 0.0                                                                VELP 510
      XX(J) = 0.0                                                                VELP 520
      U2TBL(J) = 0.0                                                             VELP 530
   10 AP(J) = 0.0                                                                VELP 540
C                                                                                VELP 550
      R(1)= RAT                                                                  VELP 560
      A(1)=PI*R(1)**2                                                            VELP 570
      U2TBL(1)=1.0                                                               VELP 580
      R(KN) = RAC                                                                VELP 590
      ALFA = ALFA*.01745329                                                      VELP 600
      CALFA=COS(ALFA)                                                            VELP 610
      SALFA=SIN(ALFA)                                                            VELP 620
      CTALFA=CALFA/SALFA                                                         VELP 630
      RSTA1=RAT+RCT*(1.0-CALFA)                                                  VELP 640
      RSTA2=RAC-RCC*(1.0-CALFA)                                                  VELP 650
      ZZ1=RCT*SALFA                                                              VELP 660
      ZZ2=ZZ1+CTALFA*(RSTA2-RSTA1)                                               VELP 670
      ZZ3=ZZ2+RCC*SALFA                                                          VELP 680
      DELTZ = ZZ3/(FKN-1.0)                                                      VELP 690
C                                                                                VELP 700
      JFLAG1=1                                                                   VELP 710
C                                                                                VELP 720
      DO 80 I = 2,KNM1                                                           VELP 730
      ZZ(I) = ZZ(I-1) + DELTZ                                                    VELP 740
      GO TO (20,40,60),JFLAG1                                                    VELP 750
   20 R(I)=RAT+RCT-SQRT(RCT**2-ZZ(I)**2)                                         VELP 760
      IF(R(I)-RSTA1)70,70,30                                                     VELP 770
   30 JFLAG1=2                                                                   VELP 780
   40 R(I)=RSTA1+(RSTA2-RSTA1)*(ZZ(I)-ZZ1)/(ZZ2-ZZ1)                             VELP 790
      IF(R(I) - RSTA2)70,70,50                                                   VELP 800
   50 JFLAG1=3                                                                   VELP 810
   60 R(I)=RAC-RCC+SQRT(RCC**2-(ZZ3-ZZ(I))**2)                                   VELP 820
   70 A(I)=PI*R(I)**2                                                            VELP 830
   80 CONTINUE                                                                   VELP 840
C                                                                                VELP 850
      ZZ(KN) = ZZ(KNM1) + DELTZ                                                  VELP 860
      A(KN) = PI*RAC**2                                                          VELP 870
      AMM = 1.0+ DELAM                                                           VELP 880
      G1=2.0/(G +1.0)                                                            VELP 890
      G2 =(G - 1.0)/2.0                                                          VELP 900
      G3 = (G + 1.0)/(2.0*G - 2.0)                                               VELP 910
      G4=1.0/G1                                                                  VELP 920
C                                                                                VELP 930
      DO 90 J = 1,KN                                                             VELP 940
      AMM = AMM - DELAM                                                          VELP 950
      AM(J) = AMM                                                                VELP 960
      AP(J)=(A(1)/AMM)*(G1*(1.0+G2*AMM**2))**G3                                  VELP 970
   90 CONTINUE                                                                   VELP 980
C                                                                                VELP 990
      DO 100 K = 2,KN                                                            VELP1000
      CALL INT4(AP(1),AM(1),A(K),AMP(K))                                         VELP1010
      AMP2=AMP(K)**2                                                             VELP1020
      U2TBL(K)=(G4*AMP2)/(1.0+G2*AMP2)                                           VELP1030
  100 CONTINUE                                                                   VELP1040
C                                                                                VELP1050
      DESIRE = AMP(KN)                                                           VELP1060
      XINT = 0.0                                                                 VELP1070
      NN = KN - 2                                                                VELP1080
      K = 1                                                                      VELP1090
      XK = SQRT(G1*RAT/RCT)                                                      VELP1100
      PROD = 2.0*XK*DELTZ/3.0                                                    VELP1110
      DO 110 J = 1,NN,2                                                          VELP1120
      T1 = SQRT(U2TBL(J))                                                        VELP1130
      T2 = SQRT(U2TBL(J+1))                                                      VELP1140
      T3 = SQRT(U2TBL(J+2))                                                      VELP1150
      XINT = XINT + PROD*(T1+4.0*T2+T3)                                          VELP1160
      K = K + 1                                                                  VELP1170
      XX(K) = -XINT/RAT                                                          VELP1180
      U2TBL(K-1) = U2TBL(J)                                                      VELP1190
  110 CONTINUE                                                                   VELP1200
```

```
      U2TBL(K) = U2TBL(KN)                                              VELP1210
C**********                                                             VELP1220
      RETURN                                                            VELP1230
      END                                                               VELP1240
```

```
$IBFTC LONGIT  LIST,M94                                                  LONG
      SUBROUTINE  LONGL                                                  LONG  10
C                                                                        LONG  20
      COMMON  /ABCDF /  DINP(4300)                                       LONG  30
      DIMENSION                                                          LONG  40
     1   EXTRA(100),DISTL(20),DISTM(20),AMIT(90),                        LONG  50
     2   TAB(150,3), OMG(150), ALFR(150), ALFI(150), W(27)               LONG  60
      EQUIVALENCE                                                        LONG  70
     1   (EXTRA(11),GAMMA),   (DINP(107), U1BAR ) , (EXTRA(23), W ),     LONG  80
     2   (EXTRA(14),RAC),(EXTRA(15), ELCH),(EXTRA(16),SOUND,CO),         LONG  90
     3   ( DINP(17),ULM ),( DINP(18),ZK ),                               LONG 100
     4   (EXTRA(20),ELNOZ),(EXTRA(51),DISTL),(EXTRA(71),DISTM),          LONG 110
     5   (DINP(1), EXTRA),                                              LONG 120
     6   (DINP(151),TAB,OMG),(DINP(301),ALFR),(DINP(451),ALFI),          LONG 130
     7   (DINP(601),AMIT)                                               LONG 140
C                                                                        LONG 150
C                                                                        LONG 160
   10 FORMAT (21X,F7.1, 11X, F10.5, 10X, F10.5, 10X, F10.5)              LONG 170
   20 FORMAT ( /  11X, 30H RESULTS FOR LONGITUDINAL MODE //21X,7HFC(CPS)  LONG 180
     1 15X,5HOMEGA,14X,7HTAU(MS),16X,1HN )                               LONG 190
   30 FORMAT     (//,8H U1BAR =,E15.8,,9X,7HGAMMA =,E15.8,3X,3HZK =,E15.8,3X,  LONG 200
     1X,3HX =,E15.8,,3X,5HULM =E15.8 )                                   LONG 210
C                                                                        LONG 220
      CALL  PAGE  (60)                                                   LONG 230
      NINC = 10                                                          LONG 240
      EIN = 1.0E-4                                                       LONG 241
      CALL  INT4  ( DISTL(1), DISTM(1), ELCH, EDIST )                    LONG 250
      CALL  INTGR  ( 0.0, ELCH, X, NINC )                                LONG 260
         CALL  INT4  ( DISTL(1), DISTM(1), X    , UOFX )                 LONG 270
      CALL  INTGS  ( UOFX, SUMM, EIN, MINC )                             LONG 280
      XX = 1.0 - SUMM/(EDIST*ELCH)                                       LONG 290
      ULO = ULM / SOUND                                                  LONG 300
      WRITE (6,30)U1BAR, GAMMA, ZK, XX, ULM                              LONG 320
      WRITE (6,20)                                                       LONG 350
      U1BAR2=U1BAR*U1BAR                                                 LONG 360
      T1BAR=1.0-.5*(GAMMA-1.0)*U1BAR2                                    LONG 370
      C1BAR=SQRT(T1BAR)                                                  LONG 380
      ZETA1B=1.0/(T1BAR-GAMMA*U1BAR2*(ZK-1.0))                           LONG 390
      ASTAR=2.0*C1BAR/(C1BAR**2-U1BAR2)                                  LONG 400
C                                                                        LONG 410
   50 NOMEG = EXTRA(22) + .001                                           LONG 420
      IJ = NOMEG-1                                                       LONG 430
      KK = 1                                                             LONG 440
      IK = 9*IJ + 1                                                      LONG 450
      DO 60 J = 1, IJ                                                    LONG 460
         OMG(KK) = W(J)                                                  LONG 470
         DELT = 0.2*(W(J+1)-W(J))                                        LONG 480
         KK = KK+1                                                       LONG 490
         DO 60 I = 1, 4                                                  LONG 500
            OMG(KK) = OMG(KK-1) + DELT                                   LONG 510
            KK = KK + 1                                                  LONG 520
   60 CONTINUE                                                           LONG 530
      OMG(KK) = W(NOMEG)                                                 LONG 540
      DO 70 KK = 1, IK                                                   LONG 550
         CALL  INT4  ( AMIT(1), AMIT(31), OMG(KK), ALFR(KK) )            LONG 560
         CALL  INT4  ( AMIT(1), AMIT(61), OMG(KK), ALFI(KK) )            LONG 570
   70    CONTINUE                                                        LONG 580
      DO 130 I = 1, IK                                                   LONG 590
         IF ( I .EQ. 51 .OR. I .EQ. 101 )       CALL  PAGE ( 60         LONG 600
      OMEGA=TAB(I,1)                                                     LONG 610
      ALPRE=TAB(I,2)                                                     LONG 620
      ALPIM=TAB(I,3)                                                     LONG 630
      DENB=(C1BAR-U1BAR*ALPRE)**2+U1BAR2*ALPIM*ALPIM                     LONG 640
      BRE=(C1BAR*C1BAR-U1BAR2*(ALPRE*ALPRE+ALPIM*ALPIM))/DENB            LONG 650
      BIM=2.0*C1BAR*U1BAR*ALPIM/DENB                                     LONG 660
      UL=ULO-ZK*XX                                                       LONG 670
      ZETAL=ZETA1B*U1BAR/UL                                              LONG 680
      A=2.0*ZETA1B*U1BAR*GAMMA*ZK/OMEGA                                  LONG 690
      B=T1BAR/GAMMA+U1BAR2/GAMMA                                         LONG 700
      C=2.0*U1BAR*C1BAR/GAMMA                                            LONG 710
      D=1.0+ZETAL*ZK/OMEGA                                               LONG 720
      PHI=OMEGA*ASTAR*(1.0-XX)                                           LONG 730
      THETA=2.0*OMEGA*XX                                                 LONG 740
      SINPHI=SIN(PHI)                                                    LONG 750
      COSPHI=COS(PHI)                                                    LONG 760
      SINTH=SIN(THETA)                                                   LONG 770
      COSTH=COS(THETA)                                                   LONG 780
      CR=1.0+BRE*COSPHI-BIM*SINPHI                                       LONG 790
      CI=BIM*COSPHI+BRE*SINPHI                                           LONG 800
      DR=1.0-BRE*COSPHI+BIM*SINPHI                                       LONG 810
      DI= -BIM*COSPHI-BRE*SINPHI                                         LONG 820
      ER=1.0-COSTH                                                       LONG 830
      EI=  SINTH                                                         LONG 840
      FR=1.0+COSTH                                                       LONG 850
      FI=-SINTH                                                          LONG 860
      CAPI=(FR/GAMMA)*(U1BAR*CR-C1BAR*DR)-(FI/GAMMA)*(U1BAR*CI+C1BAR*DI);LONG 870
     1+(D*B-U1BAR*A)*(ER*CR-EI*CI)+(C1BAR*A-C*D)*(ER*DR-FI*DI)           LONG 880
      CAPJ=(FI/GAMMA)*(U1BAR*CR-C1BAR*DR)+(FR/GAMMA)*(U1BAR*CI-C1BAR*DI)LONG 890
     1+(D*B-U1BAR*A)*(ER*CI+EI*CR)+(C1BAR*A-C*D)*(ER*DI+EI*DR)           LONG 900
      CAPK=FR*(B*CR-C*DR)-FI*(B*CI-C*DI)                                 LONG 910
      CAPL=FI*(B*CR-C*DR) +FR*(B*CI-C*DI)                                LONG 920
      DENMN=CAPK*CAPK+CAPL*CAPL                                          LONG 930
      CAPM=(CAPK*CAPI+CAPL*CAPJ)/DENMN                                   LONG 940
      CAPN=(CAPK*CAPJ-CAPL*CAPI)/DENMN                                   LONG 950
      SE=UL*GAMMA*(1.0+ZETAL-ZETA1B)                                     LONG 960
      T=.5*(CAPM*CAPM+CAPN*CAPN)/CAPM                                    LONG 970
      ZN=T/SE                                                            LONG 980
      COSOD=1.0-CAPM/T                                                   LONG 990
      SINOD = CAPN /T                                                    LONG1000
      OMDEL  = ATAN(SINOD/COSOD)                                         LONG1010
      IF (SINOD) 80,110,110                                              LONG1020
   80 IF (COSOD) 100,100,90                                              LONG1030
   90 OMDEL=6.2831853+OMDEL                                              LONG1040
      GO TO 120                                                          LONG1050
  100 OMDEL=3.1415927+OMDEL                                              LONG1060
      GO TO 120                                                          LONG1070
  110 IF (COSOD) 100,120,120                                             LONG1080
  120 DELTA=OMDEL/OMEGA                                                  LONG1090
C        NON-DIMENSIONALIZED RESULTS                                     LONG1100
      TAUMS = DELTA*ELCH/SOUND*89.333333                                 LONG1110
      FREQ = OMEGA*SOUND/ELCH*12.0/6.2831853                             LONG1120
      WRITE (6,10)  FREQ, OMEGA, TAUMS, ZN                               LONG1130
  130 CONTINUE                                                           LONG1140
      RETURN                                                             LONG1150
           END                                                           LONG1160
```

```
$IBFTC NTAU    LIST,M94                                                        NTAU
       SUBROUTINE  FFF ( FIN, FOUT, CF, NER, W )                              NTAU  10
C*************************************************************************** NTAU  20
       DIMENSION FIN(1),FOUT(1),A(133),B(133),OMGA(1),XN(1),TAU(1),OMX(1)NTAU  30
      1,HTRINT(1),HTIINT(1)                                                   NTAU  40
       DIMENSION XNNEW(41),FCCPS(41),W (1)                                    NTAU  50
       COMMON  /ABCDF /  EXTRA(100),  ABLOK(600), A   , B,  XNNEW, FCCPS NTAU  60
       EQUIVALENCE (A(9),ONW),(A(10),OMGA),(A(51),HTRINT),(A(92),HTIINT),NTAU  70
      1(B(9),XNW),(B(10),OMX),(B(51),TAU),(B(92),XN)                          NTAU  80
C                                                                             NTAU  90
C                                                                             NTAU 100
       CONST=FOUT(101)                                                        NTAU 110
       XNMIN=1000.0                                                           NTAU 120
       CALL PAGE(70)                                                          NTAU 130
       CALL DVCHK (K000FX)                                                    NTAU 140
   10 DO 20 I=1,133                                                           NTAU 150
       A(I) =FIN(I)                                                           NTAU 160
   20 B(I)=0.0                                                                NTAU 170
       NER=IFIX(ONW)                                                          NTAU 180
       XNW=ONW                                                                NTAU 190
       IF(CF-99.0)70,70,30                                                    NTAU 200
   30 CALL PAGE (44)                                                          NTAU 210
       WRITE (6,40)                                                           NTAU 220
   40 FORMAT (1H0,50H PROGRAM  F  INPUT  SOLVE FOR N(W) AND TAU(W)            NTAU 230
      1//19X,8H(OMEGA),9X,6HHTRINT,10X,6HHTIINT)                              NTAU 240
       DO 50 I =1,40                                                          NTAU 250
   50 WRITE (6,60)OMGA(I),HTRINT(I), HTIINT(I)                                NTAU 260
   60 FORMAT(1H ,10X,3F16.6)                                                  NTAU 270
   70 CONTINUE                                                                NTAU 280
       DO 120 I =1,40                                                         NTAU 290
       XN(I)=(HTRINT(I)*HTRINT(I) + HTIINT(I)*HTIINT(I))/(2.0*HTRINT(I))      NTAU 300
       DNOM = XN(I) - HTRINT(I)                                               NTAU 310
       CALL QUAD (DNOM,HTIINT(I),TAU(I))                                      NTAU 320
       TAU(I)=(TAU(I)*A(1)*83.333333)/(A(2)*OMGA(I))                          NTAU 330
C A(1)=L,A(2)=CO                                                              NTAU 340
       OMX(I)=OMGA(I)                                                         NTAU 350
       CALL DVCHK (K000FX)                                                    NTAU 360
        GO TO (80,90),K000FX                                                  NTAU 370
   80 NER=0                                                                   NTAU 380
       GO TO 220                                                              NTAU 390
   90 IF(XN(I))120,120,100                                                    NTAU 400
  100 IF(XN(I)-XNMIN) 110,120,120                                             NTAU 410
  110 XNMIN=XN(I)                                                             NTAU 420
       IMIN=I                                                                 NTAU 430
  120 CONTINUE                                                                NTAU 440
       DO 130 I=1,100                                                         NTAU 450
  130 FOUT(I) = B(I)                                                          NTAU 460
       IF ( CF-9.0 )           180,180,140                                    NTAU 470
  140 CALL PAGE (45)                                                          NTAU 480
       WRITE (6,150)                                                          NTAU 490
  150 FORMAT(1H0,20H PROGRAM  F  OUTPUT  //21X,7HFC(CPS),13X,8H(OMGA)D,NTAU 500
      113X,7HTAU(MS),16X,1HN  )                                               NTAU 510
       DO 160 I=1,40                                                          NTAU 520
       FCCPS(I)=CONST*OMX(I)                                                  NTAU 530
  160 WRITE (6,170)FCCPS(I),OMX(I),TAU(I),XN(I)                               NTAU 540
  170 FORMAT(21X,F7.1 ,11X,F10.5,10X,F10.5,10X,F10.5)                         NTAU 550
  180 HTIINT(41) = 0.0                                                        NTAU 560
       HTRINT(41)=0.0                                                         NTAU 570
       XN(41)=0.0                                                             NTAU 580
       OMX(41)=0.0                                                            NTAU 590
       FCCPS(41)=0.0                                                          NTAU 600
  190 FORMAT(36X,5HNMIN=,F10.5,/36X,8HTAU(MS)=,F10.5,/36X,9H(OMEGA)D=,F1NTAU 610
      10.5,/36X,8HFC(CPS)=,F10.1,)                                            NTAU 620
       DO 200 I =1,40                                                         NTAU 630
  200  CALL INT4D(OMX(1),XN(1),OMX(I),SAVNOT,XNNEW(I))                        NTAU 640
       XNNEW(41)=0.0                                                          NTAU 650
        CALL INT4(XNNEW(1),OMX(1),0.0,DOMMIN)                                 NTAU 660
       FCMIN=CONST*DOMMIN                                                     NTAU 670
       CALL INT4(FCCPS(1),HTRINT(1),FCMIN,HTR1)                               NTAU 680
       CALL INT4(FCCPS(1),HTIINT(1),FCMIN,HTI1)                               NTAU 690
       HTRMIN=(HTR1*HTR1+HTI1*HTI1)/(2.0*HTR1)                                NTAU 700
       DNOM=HTRMIN-HTR1                                                       NTAU 710
       CALL QUAD(DNOM,HTI1,TAUMIN)                                            NTAU 720
       TAUMIN=(TAUMIN*A(1)*83.333333)/(A(2)*DOMMIN)                           NTAU 730
       CALL PAGE (8)                                                          NTAU 740
       WRITE (6,210)                                                          NTAU 750
  210 FORMAT(//21X,58H THE FOLLOWING ARE VALUES INTERPOLATED AT SLOPE OFNTAU 760
      1 N=0.0                    ,/)                                          NTAU 770
       WRITE (6,190)HTRMIN,TAUMIN,DOMMIN,FCMIN                               NTAU 780
  220 RETURN                                                                  NTAU 790
       END                                                                    NTAU 800


$IBFTC QUADR   LIST,M94                                                       QUAD
       SUBROUTINE QUAD (A,B,ANGLE)                                            QUAD  10
       IF(B) 10,50,80                                                         QUAD  20
   10 IF(A) 20,30,40                                                          QUAD  30
   20 ROTATE = 3.1415927                                                      QUAD  40
       GO TO 110                                                              QUAD  50
   30 ANGLE = 4.7123890                                                       QUAD  60
       GO TO 120                                                              QUAD  70
   40 ROTATE = 6.2831853                                                      QUAD  80
       GO TO 110                                                              QUAD  90
   50 IF (A) 60,70,70                                                         QUAD 100
   60 ANGLE = 3.1415927                                                       QUAD 110
       GO TO 120                                                              QUAD 120
   70 ANGLE = 0.0                                                             QUAD 130
       GO TO 120                                                              QUAD 140
   80 IF(A) 20,90,100                                                         QUAD 150
   90 ANGLE = 1.5707963                                                       QUAD 160
       GO TO 120                                                              QUAD 170
  100 ROTATE = 0.0                                                            QUAD 180
  110 ANGLE = ATAN(B/A) + ROTATE                                              QUAD 190
  120 RETURN                                                                  QUAD 200
       END                                                                    QUAD 210


$IBFTC KORE    LIST,M94                                                       KORE
       SUBROUTINE CORE(X,N,CODE)                                              KORE  10
       DIMENSION X(1)                                                         KORE  20
       IF(CODE-500.0)40,10,10                                                 KORE  30
   10 CODE=100.0                                                              KORE  40
       CALL PAGE(70)                                                          KORE  50
       WRITE (6,20)                                                           KORE  60
   20 FORMAT(10X,37HINPUT DATA DUMP FOR PROGRAM FAILIER      //)              KORE  70
       WRITE (6,30)(X(I),I=1,N)                                               KORE  80
   30 FORMAT(5X,10(F10.4,2X))                                                 KORE  90
   40 RETURN                                                                  KORE 100
       END                                                                    KORE 110
```

```
$ORIGIN        ALODE,REW

$INCLUDE       JECTOR

$IBFTC INJ     LIST,M94                                                    INJ
      SUBROUTINE  INJCTR                                                   INJ   10
C                                                                          INJ   20
      COMMON  /PROLOG/  LOGIK(38), HEAD(12), SL1, SL2, EORJ                INJ   30
      COMMON  /JECTOR/  EJDATA( 9600)                                      INJ   40
C                                                                          INJ   50
      EQUIVALENCE  (LOGIK(5),ERUN) , (LOGIK(10),JRUN ) , (LOGIK(9),IRUN)   INJ   60
      LOGICAL  LOGIK, ERUN, JRUN, SL1, SL2, EORJ, IRUN                     INJ   70
      DIMENSION  HEAD1(12)                                                 INJ   80
C                                                                          INJ   90
      IF ( SL1 )              GO TO 20                                     INJ  100
      DO 10 I = 1, 9600                                                    INJ  110
   10    EJDATA(I) = 0.0                                                   INJ  120
      SL1 = .TRUE.                                                         INJ  130
      GO TO 30                                                             INJ  140
C                                                                          INJ  150
   20 READ (13)  EJDATA                                                    INJ  160
      BACKSPACE  13                                                        INJ  170
   30 CALL  AS138  ( EJDATA, HEAD1, NE )                                   INJ  180
      IF ( NE .NE. 1 )          CALL  EXIT                                 INJ  190
      WRITE (13)  EJDATA                                                   INJ  195
      BACKSPACE  13                                                        INJ  196
      IF ( .NOT. JRUN )       GO TO 40                                     INJ  200
      CALL  JJJ                                                            INJ  210
   40 IF ( ERUN .OR. IRUN )   CALL  INJDIS                                 INJ  220
C                                                                          INJ  230
   50 RETURN                                                               INJ  240
         END                                                               INJ  250


$IBFTC JECT    LIST,M94                                                    JECT
      SUBROUTINE JJJ                                                       JECT  10
C                                                                          JECT  20
C  ************  DECK MODIFIED 20 AUG 67     **********************        JECT  30
C                                                                          JECT  40
      DIMENSION  THET1(1450), R1(1450), TMU(1000)                          JECT  50
      DIMENSION              NELE(10001,X(1000),Y(1000),NTYPEE(1000),R(22)JECT  60
     1,THETA(182),AS(20),WTE(1000),AAX(1000),AAF(1000),NBAND(1000),XMRE(JECT  70
     21000),XMUTOT(20),AXTY(200),AFTY(200),XX(1000),YY(1000)              JECT  80
      COMMON  /JECTOR/  DATA ( 9600)                                       JECT  90
C                                                                          JECT 130
      EQUIVALENCE (DATA(3),XM), (DATA(4),XN)                               JECT 140
      EQUIVALENCE (DATA(1021),THET1),(DATA(2471),R1),(DATA(3921),TMU)      JECT 150
      EQUIVALENCE (NTYPEE,DATA(2001)),(AXTY,DATA(1001)),(AFTY,DATA(1201))JECT 160
     1), (DATA(1921),XX),(DATA(2921),YY),(DATA(4921),XMUTOT)               JECT 170
C                                                                          JECT 180
      NERROR=0                                                             JECT 200
      SECT=DATA(5)                                                         JECT 210
      WT=DATA(9579)                                                        JECT 220
      RINJ=DATA(9574)                                                      JECT 230
      XMR=DATA(9575)                                                       JECT 240
      FFC=DATA(9576)                                                       JECT 250
      DFFC=DATA(9577)                                                      JECT 260
      NT=DATA(9570)+.0001                                                  JECT 270
      POLAR=DATA(9572)                                                     JECT 280
      NE=DATA(9571)+.0001                                                  JECT 290
      ROX=DATA(9579)                                                       JECT 300
      ROF=DATA(9580)                                                       JECT 310
      EMUMAX=5.0                                                           JECT 320
      PXADJ=1.0                                                            JECT 330
      PFADJ=1.0                                                            JECT 340
      CDX=DATA(9585)                                                       JECT 350
      CDF=DATA(9586)                                                       JECT 360
      XFC=DATA(9591)                                                       JECT 370
      DXFC=DATA(9592)                                                      JECT 380
      PFFC = DATA(9589)/100.0                                              JECT 390
      PXFC = DATA(9590)/100.0                                              JECT 400
      IF (XM .EQ. 0.0 ) XM = 20.0                                          JECT 410
      IF ( XN .EQ. 0.0 ) XN = 180.0                                        JECT 420
   10 K=319                                                                JECT 430
      SENL=6.2831853/SECT                                                  JECT 440
      IF(DATA(322))20,30,30                                                JECT 450
   20 ROTATE=3.1415926/SECT                                                JECT 460
      GO TO 40                                                             JECT 470
   30 ROTATE=0.0                                                           JECT 480
   40 IF(POLAR)50,60,60                                                    JECT 490
   50 IF(SECT-1.0)80,80,60                                                 JECT 500
   60 DO 70 I=1,NE                                                         JECT 510
      KK=K+1                                                               JECT 520
      NELE(I)=DATA(KK)+.0001                                               JECT 530
      X(I)=DATA(KK+1)                                                      JECT 540
      Y(I)=DATA(KK+2)                                                      JECT 550
      NTYPEE(I)=DATA(KK+3)+.0001                                           JECT 560
      SAVE=SQRT(X(I)*X(I)+Y(I)*Y(I))                                       JECT 570
      Y(I)=(ATAN(Y(I)/X(I)))+ROTATE                                        JECT 580
      X(I)=SAVE                                                            JECT 590
      K=K+4                                                                JECT 600
   70 CONTINUE                                                             JECT 610
      GO TO 220                                                            JECT 620
   80 DO 170 I=1,NE                                                        JECT 630
      KK=K+1                                                               JECT 640
      NELE(I)=DATA(KK)+.0001                                               JECT 650
      X(I)=DATA(KK+1)                                                      JECT 660
      Y(I)=DATA(KK+2)                                                      JECT 670
      NTYPEE(I)=DATA(KK+3)+.0001                                           JECT 680
C     THE FOLLOWING SEGMENT OF CODING REPLACES SUBROUTINE MOVXY...         JECT 690
         IF ( Y(I) )            90,130,140                                JECT 700
   90    IF ( X(I) )           100,110,120                                JECT 710
  100    ROTATE = 3.1415927                                                JECT 720
         GO TO 160                                                         JECT 730
  110    X(I) = 1.0E-15                                                    JECT 740
  120    ROTATE = 6.2831853                                                JECT 750
         GO TO 160                                                         JECT 760
  130    ROTATE = 0.0                                                      JECT 770
         GO TO 160                                                         JECT 780
  140    IF ( X(I) )           100,150,130                                 JECT 790
  150    X(I) = 1.0E-15                                                    JECT 800
         ROTATE = 0.0                                                      JECT 810
  160 SAVE = SQRT ( X(I)*X(I)+Y(I)*Y(I) )                                  JECT 820
      SAVE=SQRT(X(I)*X(I)+Y(I)*Y(I))                                       JECT 830
      Y(I)=(ATAN(Y(I)/X(I)))+ROTATE                                        JECT 840
      X(I)=SAVE                                                            JECT 850
      K=K+4                                                                JECT 860
  170 CONTINUE                                                             JECT 870
      GO TO 220                                                            JECT 880
```

```
  180 IF(SECT-1.0)190,190,200                                          JECT 890
  190 ROTATE=0.0                                                       JECT 900
  200 DO 210 I=1,NE                                                    JECT 910
      KK=K+1                                                           JECT 920
      NELE(I)=DATA(KK)+.0001                                           JECT 930
      X(I)=DATA(KK+1)                                                  JECT 940
      Y(I)=(DATA(KK+2)*.0174532)+ROTATE                                JECT 950
      NTYPEE(I)=DATA(KK+3)+.0001                                       JECT 960
      K=K+4                                                            JECT 970
  210 CONTINUE                                                         JECT 980
CCCCCCCCCCCCCCCCCCCCCCCCCCCCCCCCCCCCCCCCCCCCCCCCCCCCCCCCCCCCCCCCCCCCCJECT 990
C     CALCULATING AREAS OF ELEMENTS                                  JECT1000
CCCCCCCCCCCCCCCCCCCCCCCCCCCCCCCCCCCCCCCCCCCCCCCCCCCCCCCCCCCCCCCCCCCCCJECT1010
                                                                     JECT1020
  220 NN=4944                                                        JECT1030
      DO 280 I=1,NT                                                  JECT1040
      KK=NN+1                                                        JECT1050
      NST=DATA(KK)+.0001                                             JECT1060
      KK1=KK+I                                                       JECT1070
      JJ=KK1                                                         JECT1080
      NX=DATA(KK1)+.0001                                             JECT1090
      AXTY(NST)=0.0                                                  JECT1100
      IF(NX)230,250,230                                              JECT1110
  230 DO 240 JX=1,NX                                                 JECT1120
      JJ=KK1+JX                                                      JECT1130
      AXTY(NST)=AXTY(NST)+(.7853981*(DATA(JJ)*DATA(JJ)))             JECT1140
  240 CONTINUE                                                       JECT1150
  250 NN1=JJ+1                                                       JECT1160
      NN=NN1                                                         JECT1170
      NF=DATA(NN1)+.0001                                             JECT1180
      AFTY(NST)=0.0                                                  JECT1190
      IF(NF)260,280,260                                              JECT1200
  260 DO 270 JF=1,NF                                                 JECT1210
      NN=NN1+JF                                                      JECT1220
      AFTY(NST)=AFTY(NST)+(.7853981*(DATA(NN)*DATA(NN)))             JECT1230
  270 CONTINUE                                                       JECT1240
  280 CONTINUE                                                       JECT1250
      AXTOT=0.0                                                      JECT1260
      AFTOT=0.0                                                      JECT1270
      DO 290 I=1,NE                                                  JECT1280
      NN=NTYPEE(I)                                                   JECT1290
      AAX(I)=AXTY(NN)                                                JECT1300
      AAF(I)=AFTY(NN)                                                JECT1310
      AXTOT=AXTOT+AAX(I)                                             JECT1320
      AFTOT=AFTOT+AAF(I)                                             JECT1330
  290 CONTINUE                                                       JECT1340
      AXTOT=AXTOT*SECT                                               JECT1350
      AFTOT=AFTOT*SECT                                               JECT1360
CCCCCCCCCCCCCCCCCCCCCCCCCCCCCCCCCCCCCCCCCCCCCCCCCCCCCCCCCCCCCCCCCCCCCJECT1370
C     CALCULATING RADII AND ANGLE BOUNDRIES                          JECT1380
CCCCCCCCCCCCCCCCCCCCCCCCCCCCCCCCCCCCCCCCCCCCCCCCCCCCCCCCCCCCCCCCCCCCCJECT1390
  300 NPTS=180.0/SECT                                                JECT1400
      TPS=NPTS                                                       JECT1410
      DELTH=THENL/TPS                                                JECT1420
      AREA = 3.141592 * RINJ**2                                      JECT1430
      ASECT = AREA/(XM*XN)                                           JECT1440
      R(1) = 0.0                                                     JECT1450
      ANP = ASECT * 180.0 / 3.141592                                 JECT1460
      DO 310 I = 2,21                                                JECT1470
      R(I) = SQRT ( ANP + R(I-1)**2)                                 JECT1480
  310 CONTINUE                                                       JECT1490
      R(22) = 0.0                                                    JECT1500
      XNUM=0.0                                                       JECT1510
      NPTS1=NPTS+1                                                   JECT1520
      DO 320 J=2,NPTS1                                               JECT1530
      XNUM=XNUM+1.0                                                  JECT1540
      THETA(J)=DELTH*XNUM                                            JECT1550
  320 CONTINUE                                                       JECT1560
CCCCCCCCCCCCCCCCCCCCCCCCCCCCCCCCCCCCCCCCCCCCCCCCCCCCCCCCCCCCCCCCCCCCCJECT1570
C     CALCULATING WEIGHT FLOW                                        JECT1580
CCCCCCCCCCCCCCCCCCCCCCCCCCCCCCCCCCCCCCCCCCCCCCCCCCCCCCCCCCCCCCCCCCCCCJECT1590
      WFT1=WT/(XMR+1.0)                                              JECT1600
      WXT1=WT-WFT1                                                   JECT1610
      WFT2=WFT1                                                      JECT1620
      WXT2=WXT1                                                      JECT1630
      IF(PFFC)340,340,330                                            JECT1640
  330 WFT2=WFT1*(1.0-PFFC)                                           JECT1650
  340 IF(PXFC)360,360,350                                            JECT1660
  350 WXT2=WXT1*(1.0-PXFC)                                           JECT1670
  360 SIGMEN=WT/(3.141592*RINJ*RINJ)                                 JECT1680
  370 AXTMAX=AXTOT                                                   JECT1690
      AXTMIN=AXTOT                                                   JECT1700
      AFTMAX=AFTOT                                                   JECT1710
      AFTMIN=AFTOT                                                   JECT1720
  380 AFFC=0.0                                                       JECT1730
      AXFC=0.0                                                       JECT1740
      IF(DFFC)400,400,390                                            JECT1750
  390 AFFC=FFC*.785398*DFFC*DFFC                                     JECT1760
      AFTMIN=AFTMIN-AFFC                                             JECT1770
      AFTMAX=AFTMAX-AFFC                                             JECT1780
  400 IF(DXFC)420,420,410                                            JECT1790
  410 AXFC=XFC*.785398*DXFC*DXFC                                     JECT1800
      AXTMIN=AXTMIN-AXFC                                             JECT1810
      AXTMAX=AXTMAX-AXFC                                             JECT1820
  420 AXNOM=(AXTMAX+AXTMIN)/2.0                                      JECT1830
      AFNOM=(AFTMAX+AFTMIN)/2.0                                      JECT1840
      IF(DFFC+DXFC)440,440,430                                       JECT1850
  430 WXT2=(WXT2*AXNOM)/(AXNOM+AXFC)                                 JECT1860
      WFT2=(WFT2*AFNOM)/(AFNOM+AFFC)                                 JECT1870
  440 XMR1=WXT2/WFT2                                                 JECT1880
  450 ETOF=0.0                                                       JECT1890
      ETFF=0.0                                                       JECT1900
      QX=WXT2/AXTOT                                                  JECT1910
      QF=WFT2/AFTOT                                                  JECT1920
      CALL DVCHK (K000FX)                                            JECT1930
  460 DO 480 I=1,NE                                                  JECT1940
      NBAND(I)=0                                                     JECT1950
      WFE1=AAF(I)*QF                                                 JECT1960
      WXE1=AAX(I)*QX                                                 JECT1970
      WTE(I)=WFE1+WXE1                                               JECT1980
      XMRE(I)=WXE1/WFE1                                              JECT1990
      ETOF=ETOF+WXE1                                                 JECT2000
      ETFF=ETFF+WFE1                                                 JECT2010
      CALL DVCHK (K000FX)                                            JECT2020
       GO TO (470,480),K000FX                                        JECT2030
  470 NBAND(I)=-1                                                    JECT2040
  480 CONTINUE                                                       JECT2050
      ETOF=SECT*ETOF                                                 JECT2060
      ETFF=SECT*ETFF                                                 JECT2070
      WMRELM=ETOF/ETFF                                               JECT2080
      AXXTT=AXTOT+AXFC                                               JECT2090
      AFFTT=AFTOT+AFFC                                               JECT2100
```

```
                                                                        JECT2110
      WXT2 = QTOF                                                       JECT2120
      WFT1=WFT2/((1.0-PFF))                                             JECT2130
      WXT1=WXT2/((1.0-PXF))                                             JECT2140
        WF11=WF11*AFF11/AXXTT                                           JECT2150
      WXT1 = WXT1*AXXTT/AXXTT                                           JECT2160
      XMRINJ=WXT1/WFT1                                                  JECT2170
      D= ((WXT1/(CDX*AXXTT))**2)**2.2960248                             JECT2180
      WTOT=WXT1+WFT1                                                    JECT2190
      DPX1=D/ROX                                                        JECT2200
      D= ((WFT1/(CDF*AFFTT))**2)**2.2960248                             JECT2210
      DPF1=D/ROF                                                        JECT2220
       TOFCF = WXT1*(1.0 - PXFC)                                        JECT2230
       TOFCF = (TOFCF*(AXXTT - AXFC))/AXXTT                             JECT2240
       TOFCF = WXT1 - TOFCF                                             JECT2250
       TFFC = WFT1*(1.0 - PFFC)                                         JECT2260
       TFFC = (TFFC*(AFFTT - AFFC))/AFFTT                               JECT2270
       TFFC = WFT1 - TFFC                                               JECT2280
      VINJX=SQRT((9273.69*DPX1 /ROX))                                   JECT2290
      VINJF=SQRT((9273.6*DPF1 /ROF))                                    JECT2300
      XXY=YPS*SIGMEN*SEC)                                               JECT2310
500 WRITE (6,820)                                                       JECT2320
      GO TO 500                                                         JECT2330
505 WRITE (6,760)AXTOT,AFTOT,AXFC,AFFC,AXXTT,AFFTT,DPX1,DPF1           JECT2340
      WRITE (6,770)WTOT,WMRELM,XMRINJ,FTOF,ETPF,TOFCF,TFFC, WXT1, WFT1 ,JECT2350
     1VINJX,VINJF                                                       JECT2360
      PFFC=PFFC*100.0                                                   JECT2370
      PXFC=PXFC*100.0                                                   JECT2380
510 WRITE (6,830)NT,NT,NE,CDX                                           JECT2390
      WRITE (6,780)CDF,PFFC,PXFC,DFFC,DXFC,FFC,XFC,ROX,ROF              JECT2400
      CALL PAGE(70)                                                     JECT2410
      WRITE (6,810)                                                     JECT2420
      NPGE=49                                                           JECT2430
      DO 540 I=1,NE                                                     JECT2440
      IF(NPGE-I)520,520,530                                             JECT2450
520 CALL PAGE(70)                                                       JECT2460
      NPGE=NPGE+48                                                      JECT2470
      WRITE (6,810)                                                     JECT2480
530 DEGREE=Y(I)/.0174532                                                JECT2490
      B=X(I)*SIN(Y(I))                                                  JECT2500
      A=X(I)*COS(Y(I))                                                  JECT2510
      WRITE (6,800)NELE(I),NTYPE(I),X(I),DEGREE,A,B                     JECT2520
540 CONTINUE                                                            JECT2530
      CALL PAGE(70)                                                     JECT2540
      NPGE=46                                                           JECT2550
      JCONT=0                                                           JECT2560
      WRITE (6,840)                                                     JECT2570
      NN=4944                                                           JECT2580
      DO 670 I=1,NT                                                     JECT2590
      KK=NN+1                                                           JECT2600
      NST=DATA(KK)+.0001                                                JECT2610
      KK1=KK+1                                                          JECT2620
      JJ=KK1                                                            JECT2630
      NX=DATA(KK1)+.0001                                                JECT2640
      JCONT=JCONT+NX+1                                                  JECT2650
      IF(NPGE-JCONT)550,550,560                                         JECT2660
550 CALL PAGE(70)                                                       JECT2670
      WRITE (6,840)                                                     JECT2680
      JCONT=0                                                           JECT2690
560 AXMAX=0.0                                                           JECT2700
      AFMAX=0.0                                                         JECT2710
      WFE1=0.0                                                          JECT2720
      WXE1=0.0                                                          JECT2730
      WRITE (6,850)NST,NX                                               JECT2740
      IF(NX)570,590,570                                                 JECT2750
570 DO 580 JX=1,NX                                                      JECT2760
      JJ=KK1+JX                                                         JECT2770
      A=.7853891*DATA(JJ)*DATA(JJ)                                      JECT2780
      B=A*QX                                                            JECT2790
      WRITE (6,860)DATA(JJ),A,B                                         JECT2800
      AXMAX=AXMAX+A                                                     JECT2810
      WXE1=WXE1+B                                                       JECT2820
580 CONTINUE                                                            JECT2830
590 NN1=JJ+1                                                            JECT2840
      NN=NN1                                                            JECT2850
      NF=DATA(NN1)+.0001                                                JECT2860
      JCONT=JCONT+NF+2                                                  JECT2870
      IF(NPGE-JCONT)600,600,610                                         JECT2880
600 CALL PAGE (70)                                                      JECT2890
      WRITE (6,840)                                                     JECT2900
      JCONT=0                                                           JECT2910
610 WRITE (6,870)NF                                                     JECT2920
      IF(NF)620,640,620                                                 JECT2930
620 DO 630 JF=1,NF                                                      JECT2940
      NN=NN1+JF                                                         JECT2950
      A=.7853891*DATA(NN)*DATA(NN)                                      JECT2960
      B=A*QF                                                            JECT2970
      WRITE (6,880)DATA(NN),A,B                                         JECT2980
      AFMAX=AFMAX+A                                                     JECT2990
      WFE1=WFE1+B                                                       JECT3000
630 CONTINUE                                                            JECT3010
640 WTOT1=WXE1+WFE1                                                     JECT3020
      IF(WFE1)660,650,660                                               JECT3030
650 WRITE (6,900)AXMAX,AFMAX,WTOT1                                      JECT3040
      GO TO 670                                                         JECT3050
660 XMR1=WXE1/WFE1                                                      JECT3060
      WRITE (6,890)AXMAX,AFMAX,WTOT1,XMR1                               JECT3070
670 CONTINUE                                                            JECT3080
680 READ  (13)  DATA                                                    JECT3090
      BACKSPACE  13                                                     JECT3100
      LINKNT = 0                                                        JECT3110
      AJS = XM*XN/WT                                                    JECT3120
      DO 700 J = 1,NE                                                   JECT3130
      TMU(J) = WTE(J)*AJS                                               JECT3140
      IF (LINKNT .GT. 0) GO TO 690                                      JECT3150
      CALL PAGE(70)                                                     JECT3160
      WRITE (6,910)                                                     JECT3170
      WRITE (6,930)                                                     JECT3180
      LINKNT = 50                                                       JECT3190
690 WRITE(6,920) J, X(J), Y(J), TMU(J)                                  JECT3200
      LINKNT = LINKNT - 1                                               JECT3210
700 CONTINUE                                                            JECT3220
      DO  705  I = 1, NE                                                JECT3222
         XX(I) = X(I)                                                   JECT3224
705      YY(I) = Y(I)                                                   JECT3225
      WRITE  (13)       DATA                                            JECT3230
      BACKSPACE  13                                                     JECT3240
      XMUMAX=0.0                                                        JECT3250
      AJS = AJS*SECT/XN                                                 JECT3260
      DO 750 J=1,20                                                     JECT3270
      TOTW=0.0                                                          JECT3280
```

```
      XXX = XXY * ASECT                                                    JECT3290
      J=J                                                                  JECT3300
      DO 710 I=1,NE                                                        JECT3310
      IF (X(I) .LE. R(J+1) .AND. X(I) .GT. R(J)) TOTW = TOTW + WTE(I)      JECT3320
  710 CONTINUE                                                             JECT3330
      XMUTOT(J) = TOTW*AJS                                                 JECT3340
      IF(XMUTOT(J)-XMUMAX)730,730,720                                      JECT3350
  720 XMUMAX=XMUTOT(J)                                                     JECT3360
  730 CONTINUE                                                             JECT3370
      CALL PAGE(70)                                                        JECT3380
      WRITE (6,790)                                                        JECT3390
      DO 740 J=1,20                                                        JECT3400
      XXMAX=XMUTOT(J)/XMUMAX                                               JECT3410
      WRITE (6,750)R(J+1),XMUTOT(J),XXMAX                                  JECT3420
  740 CONTINUE                                                             JECT3430
      RETURN                                                               JECT3440
  750 FORMAT(32X,F6.3,14X,F7.3,13X,F6.4)                                   JECT3450
  760 FORMAT(///,5X,28HA....PROPELLENT ORFICE AREAS,//,9X,34HELEMENT TOTAJECT3460
     1L OXIDIZER AREA       =,F11.8,8H SQ. IN.,15X,30HELEMENT TOTAL FUEL JECT3470
     2AREA       =,F11.8,8H SQ. IN.,/,9X,34HTOTAL OXIDIZER FILM COOLING AJECT3480
     3REA =,F11.8,8H SQ. IN.,15X,30HTOTAL FUEL FILM COOLING AREA =,F11.8JECT3490
     4,8H SQ. IN.,/,9X,34HINJECTOR TOTAL OXIDIZER AREA      =,F11.8,8H SQJECT3500
     5. IN.,15X,30HINJECTOR TOTAL FUEL AREA      =,F11.8,8H SQ. IN.,//,5XJECT3510
     6,54HB....INJECTOR PRESSURE DROPS FOR ABOVE INJECTOR DESIGN,//,9X, JECT3520
     724HOXIDIZER PRESSURE DROP =,F6.1,3HPSI,35X,20HFUEL PRESSURE DROP =JECT3530
     8,F6.1,4H PSI,///,5X,71HC....PROPELLANT FLOWS AND INJECTOR VELOCITIJECT3540
     9ES FOR ABOVE INJECTOR DESIGN,/)                                     JECT3550
  770 FORMAT(/,48X,19HTOTAL WEIGHT FLOW =,F6.1,7H LB/SEC,/,42X,39HAVERAGJECT3560
     1E MIXTURE RATIO OF THE ELEMENTS =,F7.3,/,41X,40HOVERALL MIXTURE RAJECT3570
     2TIO FOR THE INJECTOR =,F7.3,//,9X,34HELEMENT TOTAL OXIDIXER FLOW  JECT3580
     3    =,F6.1,7H LB/SEC,21X,26HELEMENT TOTAL FUEL FLOW  =,F6.1,7H LB/JECT3590
     4SEC,/,9X,34HTOTAL OXIDIZER FILM COOLING FLOW =,F6.1,7H LB/SEC,21X,JECT3600
     526HTOTAL FUEL FILM COOLING  =,F6.1,7H LB/SEC,/,9X,34HINJECTOR TOTAJECT3610
     6L OXIDIZER FLOW      =,F6.1,7H LB/SEC,21X,25HINJECTOR TOTAL FUEL FLJECT3620
     70W=,F7.1,7H LB/SEC,/,9X,37HOXIDIZER OVERALL INJECTION VELOCITY =,FJECT3630
     86.1,7H FT/SEC,18X,33HFUEL OVERALL INJECTION VELOCITY =,F6.1,7H FT/JECT3640
     9SEC,//)                                                             JECT3650
  780 FORMAT(9X,23HFUEL LOSS COEFFICIENT =,F5.3,/,9X,27HPERCENT FUEL FILJECT3660
     1M COOLING =,F5.1,/,9X,31HPERCENT OXIDIZER FILM COOLING =,F5.1,/,9XJECT3670
     2,38HDIAMETER OF FUEL FILM COOLING ORFICE =,F7.5,7H IN. (NOTE,,THIJECT3680
     3S MIGHT BE AN EQUIVALENT  DIAMETER FOR MULTIPLE-ROW COOLING),/,9X,JECT3690
     442HDIAMETER OF OXIDIZER FILM COOLING ORFICE =,F7.5,21H IN. (SEE ABJECT3700
     5OVE NOTE),/,9X,51HNUMBER OF FUEL FILM COOLING ORIFICES PER INJECTOJECT3710
     6R =,F5.0,/,9X,54HNUMBER OF OXIDIZER FILM COOLING ORFICES PER INJECJECT3720
     7TOR =,F5.0,/,9X,18HOXIDIZER DENSITY =,F7.2,4H PCF,/,9X,14HFUEL DENJECT3730
     8SITY =,F6.1,4H PCF,///)                                             JECT3740
  790 FORMAT(////,3X,114HSECTION 4..RESULTANT FLOW DISTRIBUTION (MU) AS JECT3750
     1A FUNCTION OF ONLY THE RADIUS. I.E.. AVERAGE OF MU IN A RADIAL BANJECT3760
     2D.    ///,32X,6HRADIUS,15X,5HMU(R),11X,13HMU(R)/MU(MAX),/,34X,3HINJECT3770
     3..//)                                                               JECT3780
  800 FORMAT(13X,I3,18X,I2,4X,4(10X,F10.5))                               JECT3790
  810 FORMAT(//,2X, 49HSECTION 2.... ELEMENT LOCATION AND INJECTION TYPEJECT3800
     1,///,11X, 7HELEMENT,15X, 4HTYPE,17X,1HR,17X, 5HTHETA,17X,1HX,19X,1JECT3810
     2HY,/,13X, 3HNO.,18X, 3HNO.,14X, 8H(INCHES),12X, 8H(DEGREE),12X, 8HJECT3820
     3(INCHES),12X,8H(INCHES),//)                                         JECT3830
  820 FORMAT(///,3X, 74HSECTION 1....MISCELLANEOUS INFORMATION FOR INJECJECT3840
     1TOR DESIGNED BY PROJECTS          ,/)                               JECT3850
  830 FORMAT(//,5X, 46HD.....INPUT INFORMATION USED IN COMPUTATIONS  ,/JECT3860
     1/,9X, 23HTOTAL PROPELLENT FLOW =,F6.1,7H LB/SEC,/,9X, 59HTOTAL NUMJECT3870
     2BER OF ELEMENT TYPES (SYMMETRICAL SECTION ONLY) = ,I3,/,9X, 54HTOTJECT3880
     3AL NUMBER OF ELEMENTS (SYMMETRICAL SECTION ONLY) = ,I4,/,9X, 27HOXJECT3890
     4IDIZER LOSS COEFFICIENT =,F5.3,)                                    JECT3900
  840 FORMAT(//,2X, 78HSECTION 3....TYPE DESCRIPTION,ORIFICE AREA, PROPEJECT3910
     1LLANT FLOW, AND MIXTURE RATIO,//,3X, 84HTYPE   *-------- OXIDIZER JECT3920
     2ORIFICE DATA -----**------- -- FUEL ORIFICE DATA ------- *,//,93X,JECT3930
     3 5HTOTAL,5X, 5HTOTAL,5X, 5HTOTAL,4X, 7HMIXTURE,/,12X, 6HNUMBER,34XJECT3940
     4, 6HNUMBER,33X, 8HOXIDIZER,4X, 4HFUEL,3X,10HPROPELLENT,3X, 5HRATIOJECT3950
     5,/,14X,2HOF,5X, 8HDIAMETER,4X, 4HAREA,6X, 4HFLOW,7X,2HOF,5X, 8HDIAJECT3960
     6METER,4X, 4HAREA,6X, 4HFLOW,6X, 4HAREA,6X, 4HAREA,4X, 9HFLOW RATE,JECT3970
     7/,11X, 7HORIFICE,6X,3HIN.,5X, 7HSQ. IN.,4X, 6HLB/SEC,3X, 8HORIFICEJECT3980
     8S,5X, 3HIN.,4X, 7HSQ. IN.,4X, 6HLB/SEC,3X, 7HSQ. IN.,3X, 7HSQ. IN.JECT3990
     9,4X, 6HLB/SEC,//,)                                                  JECT4000
  850 FORMAT(3X,I3,7X,I2)                                                  JECT4010
  860 FORMAT(22X,F6.4,3X,F8.6,2X,F8.6)                                     JECT4020
  870 FORMAT(54X,I2)                                                       JECT4030
  880 FORMAT(62X,F6.4,3X,F8.6,2X,F8.6)                                     JECT4040
  890 FORMAT(91X,F8.5,2X,F8.5,2X,F8.4,3X,F7.4)                             JECT4050
  900 FORMAT(91X,F8.5,2X,F8.5,2X,F8.3,2X,8HINFINITY)                       JECT4060
  910 FORMAT (///10X15HELEMENT RESULTS )                                   JECT4070
  920 FORMAT (32X15,11XF10.3,10XF10.4,11XF10.4 )                           JECT4080
  930 FORMAT (//31X7HELEMENT14X6HRADIUS15X5HANGLE11X12HDISTRIBUTION/90X JECT4090
     111HCOEFFICIENT/34X3HNO.35X7HRADIANS15X2HMU// )                      JECT4100
                      END                                                  JECT4110
```

```
$IBFTC INJDS   LIST,M94                                                    INJD
      SUBROUTINE  INJDIS                                                   INJD  10
C                                                                          INJD  20
C  ************  DECK MODIFIED 20 AUG 67     **********************        INJD  30
C                                                                          INJD  40
      REAL IPP,IPR,IPT,INTEG,IPX                                           INJD  50
      INTEGER DSCRB, TIME                                                  INJD  60
      LOGICAL  LOGIK,  SL1,  SL2,  EORJ, IRUN                              INJD  70
      COMMON  /PROLOG/  LOGIK(50), SL1, SL2, EORJ                          INJD  80
      COMMON  /JECTOR/  DATA ( 9600)                                       INJD  90
      COMMON    GAMMA, NW,  WC,  AVN,  BVN,  CVNR,  CVNI,  CE,  CI         INJD 110
      DIMENSION                                                            INJD 120
     1    U     (1000),  AVN    ( 30),  BVN    ( 30),  CVNR  ( 30),      INJD 130
     2    CVNI  ( 30),  RR    (1000),  THATA (1000),  FIRST ( 30),        INJD 140
     3    SECOND( 30),  Z     (  2),                  WC    ( 30),        INJD 150
     4     IPP(50), OPP(50), IPR(50), OPR(50), IPT(50), OPT(50),           INJD 160
     5    X     (1000),  Y     (1000)                                      INJD 170
      EQUIVALENCE  ( IRUN, LOGIK(9) ),                                     INJD 180
     1   (E1    ,DATA(1)),                  (XM    ,DATA(3)),             INJD 190
     2   (XN    ,DATA(4)),(V     ,DATA(6)),(SVN   ,DATA(8)),             INJD 200
     3   (POO   ,DATA(13)),                 (Z1  ,DATA(15)),             INJD 210
     4   (RR, X, DATA(1921) ),(THATA, Y, DATA(2921)),                     INJD 220
     5   (U   ,DATA(3921)),                                               INJD 230
     6                                 (IPP   ,DATA(20)),                 INJD 240
     7   (OPP   ,DATA(70)),(IPR ,DATA(120)), (OPR ,DATA(170)),            INJD 250
     8   (IPT ,DATA(220)),(OPT ,DATA(270)),(TFLP,DATA(9596)),             INJD 260
     9   (TFLR,DATA(9597)),(TFLT,DATA(9598))                              INJD 270
C                                                                          INJD 280
   10 FORMAT (//12X30HRESULTS OF DESCRIBING FUNCTION // 23X10HELEMENT      INJD 290
     1 6HRADIUS4X5HANGLE3X10HFRACTIONAL /13X5HOMEGA7X3HNO.7X3H   7X3HRADI INJD 300
     2 4X9HFLOW-RATE10X2HFP12X2HFR12X2HFT // )                           INJD 310
   20 FORMAT (10XF9.4,I9,F11.3,F10.4,F11.5,2X3F14.6 )                    INJD 320
   30 FORMAT (//  12X41HRESULTS OF INJECTION DISTRIBUTION EFFECTS //     INJD 330
     143X5HOMEGA6X3HAVN8X3HBVN7X3HCVN7X3HCVN / 48X3(6X4HREAL),6X4HIMAG/  INJD 340
     2/ )                                                                INJD 350
   40 FORMAT (39X5F10.4 )                                                INJD 360
   50 FORMAT ( 44X5HALL  4F10.4 )                                        INJD 370
   60 FORMAT ( // 5X39HINPUT TO INJECTION DISTRIBUTION PROGRAM//10X9HCONINJD 380
     1STANTS//14X18HNUMBER OF OMEGAS = I3//14X20HNUMBER OF ELEMENTS =I5,INJD 390
     1 19H FOR EACH OF I4, 20H SYMMETRIC SECTIONS.                       INJD 391
     2//14X22HRADIAL DIVISIONS(XM) = F5.0//14X24HANGULAR DIVISIONS (XN) INJD 400
     3=F5.0//14X27HACOUSTIC MODE NUMBER(SVN) =F7.4//14X30HORDER OF BESSEINJD 410
     4L FUNCTIONS(V) = F3.0//14X17HINJECTOR RADIUS =F8.3,5H, IN.//14X32HINJD 420
     5RATIO OF SPECIFIC HEATS(GAMMA) =F7.4//14X39HMAXIMUM PRESSURE AMPLIINJD 430
     6TUDE RATIO(POO) =F7.3///14X39HTRANSFER FUNCTIONS FOR LINEAR OPERATINJD 440
     7ION//20X16HPRESSURE(TFLP) =F7.3//20X23HRADIAL VELOCITY(TFLR) =F7.3INJD 450
     8//20X27HTANGENTIAL VELOCITY(TFLT) =F7.3 )                          INJD 460
   70 FORMAT (// 10X17HINPUT FREQUENCIES )                               INJD 470
   80 FORMAT ( 7X 9F20.4 )                                               INJD 480
   90 FORMAT (///10X19HELEMENT INFORMATION )                             INJD 490
  100 FORMAT (//31X7HELEMENT14X6HRADIUS15X5HANGLE11X12HDISTRIBUTION/90X INJD 500
     111HCOEFFICIENT/34X3HNO.17X3HIN.15X7HRADIAN$15X2HMU// )             INJD 510
  110 FORMAT (32XI5,11XF10.3,10XF10.4,11XF10.4 )                         INJD 520
  120 FORMAT (1H1//26H TABULAR NONLINEAR EFFECTS//11X8HPRESSURE11X10HCOMINJD 530
     1BUSTION12X6HRADIAL12X10HCOMBUSTION10X10HTANGENTIAL10X10HCOMBUSTIONINJD 540
     2/51X8HVELOCITY32X8HVELOCITY/ 9X 3(12HPERTURBATION13X4HGAIN12X) )   INJD 550
  130 FORMAT ( 6(F18.3,2X) )                                             INJD 560
  140 FORMAT (//33X65H************  THESE VALUES PERTAIN TO A STANDING MOINJD 570
     1DE  ********** )                                                   INJD 580
  150 FORMAT (//33X65H************  THESE VALUES PERTAIN TO A SPINNING MOINJD 590
     1DE  ********** )                                                   INJD 600
  160 FORMAT (29X42HTHE VALUE OF IZZIT IS ZERO AND NOT ALLOWED)          INJD 610
  170 FORMAT(29X45HVALUE OF BESSEL ARGUMENT TOO HIGH OR LOW Z = F10.4)    INJD 620
C                                                                        INJD 630
  180 DSCRB = 1                                                          INJD 640
      IF ( .NOT. IRUN )     GO TO 190                                    INJD 650
      CE = 100.0                                                         INJD 660
      DSCRB = 2                                                          INJD 670
      GO TO 200                                                          INJD 680
  190 NW = 1                                                             INJD 690
      WC(1) = 1.0                                                        INJD 700
  200 TIME = 1                                                           INJD 710
      RINJ = DATA(9574)                                                  INJD 720
      NE = DATA(9571)  +0.0001                                           INJD 730
      NS = DATA(5) + 0.0001                                              INJD 731
      NUMBR = DATA(9599)  + 0.0001                                       INJD 740
      IZZIT = DATA(2)                                                    INJD 750
      K = V +0.0001                                                      INJD 760
      KK = K + 1                                                         INJD 770
      L = 2*K - 1                                                        INJD 780
      M = L + 2                                                          INJD 790
      N = M + 2                                                          INJD 800
      IF ( E1 .LE. 0.0 )    E1 = 0.0001                                  INJD 810
      IF ( NUMBR .LE. 0 )     NUMBR = 10                                 INJD 820
      IF ( CE .LE. 99.0 )     GO TO 260                                  INJD 830
      CALL  PAGE  ( 70 )                                                 INJD 840
      WRITE (6,60) NW,NE,NS,XM,XN,SVN,V,RINJ,GAMMA,POO,TFLP,TFLR,TFLT    INJD 850
      GO TO (220,210), DSCRB                                             INJD 860
  210 WRITE (6,70)                                                       INJD 870
      WRITE (6,80) (WC(IW), IW = 1,NW)                                   INJD 880
  220 LINKNT = 0                                                         INJD 890
      DO 240 J = 1,NE                                                    INJD 900
      IF (LINKNT .GT. 0) GO TO 230                                       INJD 910
      CALL  PAGE  ( 70 )                                                 INJD 920
      WRITE (6,90)                                                       INJD 930
      WRITE (6,100)                                                      INJD 940
      LINKNT = 50                                                        INJD 950
  230 WRITE (6,110) J, RR(J), THATA(J), U(J)                             INJD 960
      LINKNT = LINKNT - 1                                                INJD 970
  240 CONTINUE                                                           INJD 980
      GO TO (260,250), DSCRB                                             INJD 990
  250 WRITE (6,120)                                                      INJD1000
      WRITE (6,130) (IPP(I),OPP(I),IPR(I),OPR(I),IPT(I),OPT(I),I=1,50)   INJD1010
CXXXXXXXXXXXXXXXXXXXXXXXXXXXXXXXXXXXXXXXXXXXXXXXXXXXXXXXXXXXXXXXXXXXXXINJD1020
C         RUNNING DESCRIBING FUNCTION IMPLIES THAT THE EXPANSION           INJD1030
C   COEFFICIENTS AVN, BVN, AND CVN ARE FUNCTIONS OF THE FREQUENCY,OMEGA.   INJD1040
C   THEREFORE, AN OMEGA LOOP MUST BE ESTABLISHED. OTHERWISE, THIS LOOP     INJD1050
C  IS GONE THROUGH ONLY ONCE.                                              INJD1060
CXXXXXXXXXXXXXXXXXXXXXXXXXXXXXXXXXXXXXXXXXXXXXXXXXXXXXXXXXXXXXXXXXXXXXINJD1070
  260 DO 470 IW = 1, NW                                                  INJD1080
      WCR = WC(IW)                                                       INJD1090
      VOO = POO/(GAMMA*WCR)                                              INJD1100
      SUMP = 0.0                                                         INJD1110
      SUMR = 0.0                                                         INJD1120
      SUMT = 0.0                                                         INJD1130
      LINKNT = 0                                                         INJD1140
      DO 450 J = 1, NE                                                   INJD1150
      R = RR(J)/RINJ                                                     INJD1160
      ETA = U(J)/(XM*XN)                                                 INJD1170
C ***************************************************************       INJD1180
C     THE CALL TO BESSEL REQUIRES THE DEFINITION OF THE REAL PORTION     INJD1190
```

```
C  OF THE ARGUMENT, Z(1), AND THE IMAGINARY PORTION, Z(2).     FOR A    INJD1200
C  GIVEN ORDER V, THE OUTPUT OF BESSEL GIVES JOR(Z1), JOI(Z2), J1R(Z1), INJD1210
C  J1I(Z2),  ...., JVR(Z1), JVI(Z2).     THEREFORE, THE ANSWERS WILL BE  INJD1220
C  STORED  IN THE FOLLOWING FASHION,  J(V-1) = FIRST(L),  J(V) =         INJD1230
C  FIRST(M),  AND J(V+1) = FIRST(N).                                     INJD1240
C**********************************************************************INJD1250
      KERR = 0                                                          INJD1260
      Z(1) = SVN*R                                                      INJD1270
      Z(2) = 0.0                                                        INJD1280
      CALL  BESSEL  ( FIRST(1), SECOND(1), KK, Z(1), KERR )             INJD1290
      IF ( KERR )     270,270,550                                       INJD1300
  270 SIVN = FIRST(M)                                                   INJD1310
      DSIVN = ( V*FIRST(M) - Z(1)*FIRST(N) )/R                          INJD1320
      Z(1) = SVN                                                        INJD1330
      Z(2) = 0.0                                                        INJD1340
      CALL  BESSEL  ( FIRST(1), SECOND(1), KK, Z(1), KERR )             INJD1350
      IF  ( KERR )     280,280,550                                      INJD1360
  280 GO TO (290,320),  TIME                                            INJD1370
  290 IF ( K )     300,300,310                                          INJD1380
  300 D = ( FIRST(M)*FIRST(M) + FIRST(L)*FIRST(L) ) / 2.0               INJD1390
      GO TO 320                                                         INJD1400
  310 D = ( FIRST(M)*FIRST(M) - FIRST(L)*FIRST(N))*3.14159/(2.0*DATA(5))INJD1410
  320 IF ( IZZIT )     330,560,340                                      INJD1420
CXXXXXXXXXXXXXXXXXXXXXXXXXXXXXXXXXXXXXXXXXXXXXXXXXXXXXXXXXXXXXXXXXXXINJD1430
C  IZZIT IS NEGATIVE FOR STANDING MODES AND POSITIVE FOR SPINNING MODES INJD1440
CXXXXXXXXXXXXXXXXXXXXXXXXXXXXXXXXXXXXXXXXXXXXXXXXXXXXXXXXXXXXXXXXXXXINJD1450
  330 VT = V*THATA(J)                                                   INJD1460
      CVT = COS(VT)                                                     INJD1470
      SVT = SIN(VT)                                                     INJD1480
      GO TO 350                                                         INJD1490
  340 CVT = 1.0                                                         INJD1500
      SVT = 1.0                                                         INJD1510
  350 FP = 1.0                                                          INJD1520
      FR = 1.0                                                          INJD1530
      FT = 1.0                                                          INJD1540
      GO TO (420,360), DSCRB                                            INJD1550
  360 PO = ABS(POO*SIVN*CVT)                                            INJD1560
      VO = ABS(VOO*DSIVN*CVT)                                           INJD1570
      WO = ABS(VOO*SIVN*V*SVT/R)                                        INJD1580
       A = -3.14159                                                     INJD1590
      B = -A                                                            INJD1600
      IF ( TFLP )     370,380,370                                       INJD1610
  370 SAVEP = 1.0/(3.14159*PO*TFLP)                                     INJD1620
      CALL INTGR(A,B,PSI,NUMBR)                                         INJD1630
      CPSI = COS(PSI)                                                   INJD1640
      IPX = PO*CPSI                                                     INJD1650
      CALL INT4(IPP(1), OPP(1), IPX, OPX)                               INJD1660
      F = OPX*CPSI                                                      INJD1670
       CALL INTGS(F,INTEG,E1,MM)                                        INJD1680
      FP = SAVEP*INTEG                                                  INJD1690
  380 IF ( TFLR )     390,400,390                                       INJD1700
  390 SAVER = 1.0/(3.14159*VO*TFLR)                                     INJD1710
      CALL INTGR(A,B,PSI,NUMBR)                                         INJD1720
      CPSI = COS(PSI)                                                   INJD1730
      IPX = VO*CPSI                                                     INJD1740
      CALL INT4 (IPR(1), OPR(1), IPX, OPX)                              INJD1750
      F = OPX*CPSI                                                      INJD1760
      CALL INTGS (F, INTEG, E1, MM)                                     INJD1770
      FR = SAVER*INTEG                                                  INJD1780
  400 IF ( TFLT )     410,420,410                                       INJD1790
  410 SAVET = 1.0/(3.14159*VT*TFLT)                                     INJD1800
       CALL INTGR(A,B,PSI,NUMBR)                                        INJD1810
      CPSI = COS(PSI)                                                   INJD1820
      IPX = WO*CPSI                                                     INJD1830
      CALL INT4 (IPT(1), OPT(1), IPX, OPX)                              INJD1840
      F = OPX*CPSI                                                      INJD1850
      CALL INTGS(F,INTEG,E1, MM)                                        INJD1860
      FT = SAVET*INTEG                                                  INJD1870
  420 TERMP = ETA*FP*SIVN**2*CVT**2                                     INJD1880
      SUMP = SUMP + TERMP                                               INJD1890
      TERMR = ETA*FR*SIVN*DSIVN*CVT**2                                  INJD1900
      SUMR = SUMR + TERMR                                               INJD1910
      TERMT = -ETA*FT*SIVN**2*CVT*V*SVT/R                               INJD1920
      SUMT = SUMT + TERMT                                               INJD1930
      TIME = 2                                                          INJD1940
      GO TO (450,430),  DSCRB                                           INJD1950
  430 IF ( LINKNT .GT. 0 )     GO TO 440                                INJD1960
      CALL  PAGE  ( 70 )                                                INJD1970
      WRITE (6,10)                                                      INJD1980
      LINKNT = 50                                                       INJD1990
  440 WRITE (6,20)  WCR, J, R, THATA(J), ETA, FP, FR, FT                INJD2000
      LINKNT = LINKNT - 1                                               INJD2010
  450 CONTINUE                                                          INJD2020
      DD = D                                                            INJD2030
      IF (IZZIT .GT. 0) DD = D/2.0                                      INJD2040
      AVN(IW) = SUMP/DD                                                 INJD2050
      BVN(IW) = SUMR/DD                                                 INJD2060
      IF (IZZIT .GT. 0)  GO TO 460                                      INJD2070
      CVNR(IW) = SUMT/DD                                                INJD2080
      CVNI(IW) = 0.0                                                    INJD2090
      GO TO 470                                                         INJD2100
  460 CVNR(IW) = 0.0                                                    INJD2110
      CVNI(IW) = SUMT/DD                                                INJD2120
  470 CONTINUE                                                          INJD2130
      IF (CE .LT. 10.0 ) GO TO 530                                      INJD2140
      CALL  PAGE  ( 70 )                                                INJD2150
      WRITE (6,30)                                                      INJD2160
      GO TO (480,490),  DSCRB                                           INJD2170
  480 WRITE (6,50)  AVN(1 ), BVN(1 ), CVNR(1 ), CVNI(1 )                INJD2180
      GO TO 500                                                         INJD2190
  490 WRITE (6,40)  ( WC(I), AVN(I), BVN(I), CVNR(I), CVNI(I),  I=1,NW )INJD2200
  500 IF ( IZZIT ) 510,560,520                                          INJD2210
  510 WRITE(6,140)                                                      INJD2220
      GO TO 530                                                         INJD2230
  520 WRITE (6,150)                                                     INJD2240
  530 CONTINUE                                                          INJD2250
  540 RETURN                                                            INJD2260
  550 WRITE (6,170) Z(1)                                                INJD2270
      GO TO 540                                                         INJD2280
  560 WRITE (6,160)                                                     INJD2290
      GO TO 540                                                         INJD2300
      END                                                               INJD2310
```

```
$IBNAP BESS    LIST,REF,DECK                                                  BESS0010
*      MAP                                                                    BESS0020
       PNC     ON                                                             BESS0030
       ENTRY   BESSEL                                                         BESS0040
       LBL     BESSEL,X                                                       BESS0050
*      CALL BESSEL (FIRST,SECOND,N,ARG,KODE )                                 BESS0060
*                                                                            BESS0070
*      FIRST  = FIRST LOCATION OF ASCENDING STORING SEQUENCE FOR JN(Z),       BESS0080
*               OR IN(Z).                                                    BESS0090
*      SECOND = FIRST LOCATION OF ASCENDING STORING SEQUENCE FOR YN(Z),       BESS0100
*               OR KN(Z).                                                    BESS0110
*      N      = HIGHEST INTEGRAL ORDER DESIRED FOR BOTH JN(Z) AND YN(Z),     BESS0120
*               OR IN(Z) AND KN(Z).                                          BESS0130
*      ARG    = LOCATION OF Z = X+I*Y WITH X=ARG(1) AND Y=ARG(2).            BESS0140
*      KODE   = +0,COMPUTE JN(Z) AND YN(Z).                                  BESS0150
*             LESS ZERO,COMPUTE IN(Z) AND KN(Z).                             BESS0160
*      DIMENSIONS REQUIREMENTS FIRST(3001),SECOND(2*N+2),ARG(2)               BESS0170
*                                                                            BESS0180
COMMON BSS     20                                                            BESS0190
BESSEL SXA     BS4,4                                                         BESS0200
       SXA     BS4+1,1                                                       BESS0210
       SXA     BS4+2,2                                                       BESS0220
       TXI     BESS1,4,-2                                                    BESS0230
 BESS1 CAL     1,4                                                           BESS0240
       STA     BESSF+1                                                       BESS0250
       CAL     2,4                                                           BESS0260
       ALS     18                                                            BESS0270
       STD     BESSF+1                                                       BESS0280
       LDQ*    3,4                                                           BESS0290
       STQ     BESSF+2                                                       BESS0300
       CAL*    5,4                                                           BESS0310
       STP     BESSF+1                                                       BESS0320
       CLA     4,4                                                           BESS0330
       STA     BESS2                                                         BESS0340
       ADD     =1                                                            BESS0350
       STA     BESS3                                                         BESS0360
 BESS2 CLA     **                                                            BESS0370
       LDQ     =,5E-8                                                        BESS0380
       TLQ     BESS3                                                         BESS0390
       TRA     ERRR1                                                         BESS0400
 BESS3 LDQ     **                                                            BESS0410
 BESSF TSX     BFBF,4                                                        BESS0420
       PZE     **,,**          L(J),,L(Y)                                    BESS0430
       PZE     **              N                                             BESS0440
       TRA     ERRR2           ERROR,,BFBF                                   BESS0450
       PXD     0,0                                                           BESS0460
 BS4   AXT     **,4                                                          BESS0470
       AXT     **,1                                                          BESS0480
       AXT     **,2                                                          BESS0490
       STO*    7,4                                                           BESS0500
       TRA     1,4                                                           BESS0510
 ERRR1 CLA     =1                                                            BESS0520
       TRA     BS4                                                           BESS0530
 ERRR2 CLA     =2                                                            BESS0540
       TRA     BS4                                                           BESS0550
*      REM ALL ORDERS OF THE BESSEL FUNCTIONS Y SUB K TIMES (I)              BESS0560
*          AND J SUB K TIMES (I) FOR COMPLEX Z                               BESS0570
BFBF   STI     BF81                                                          BESS0580
       LDI     1,4                                                           BESS0590
       LPT     400000                                                        BESS0600
       XCA                                                                   BESS0610
       SXD     G20,1                                                         BESS0620
       SXD     G21,2                                                         BESS0630
       SXD     G22,4                                                         BESS0640
       STO     COMMON+15                                                     BESS0650
       STQ     COMMON+16                                                     BESS0660
       CLA     0                                                             BESS0670
       STO     CL                                                            BESS0680
       CLA     8                                                             BESS0690
       STO     CL+1                                                          BESS0700
       CLA     TRA1                                                          BESS0710
       STO     8                                                             BESS0720
       EFTM                                                                  BESS0730
R23    CAL     1,4                                                           BESS0740
       STA     BFR1                                                          BESS0750
       COM                                                                   BESS0760
       ACL     L11                                                           BESS0770
       STO     COMMON+17                                                     BESS0780
       CLA     2,4                                                           BESS0790
       ALS     18                                                            BESS0800
       STD     BFR1                                                          BESS0810
       CLA     COMMON+15                                                     BESS0820
       LDQ     COMMON+16                                                     BESS0830
       TSX     BF7F,4                                                        BESS0840
BFR1   PZE     **0,0,000                                                     BESS0850
G20    TXL     BF8X,0,*                                                      BESS0860
       LDQ     COMMON+15                                                     BESS0870
B61    FMP     COMMON+15                                                     BESS0880
       STO     COMMON+9                                                      BESS0890
       LDQ     COMMON+16                                                     BESS0900
       FMP     COMMON+16                                                     BESS0910
       FAD     COMMON+9                                                      BESS0920
       FDH     LOC4                                                          BESS0930
       STQ     COMMON+9                                                      BESS0940
       CLA     COMMON+8                                                      BESS0950
       CALL ALOG(COMMON+5)                                                   BESS0960
       TRA     G21+1                                                         BESS0970
G21    TXL     BF8X,0,*                                                      BESS0980
       FDH     LOC2                                                          BESS0990
       XCA                                                                   BESS1000
       FAD     OILER                                                         BESS1010
       STO     COMMON+8        RL+GAM                                        BESS1020
       LDQ     COMMON+15                                                     BESS1030
       CLA     SMCON                                                         BESS1040
       LRS     0                                                             BESS1050
       TLQ     R2                                                            BESS1060
       TRA     R3                                                            BESS1070
R2     LDQ     COMMON+16                                                     BESS1080
       CLA     PIV2                                                          BESS1090
       LLS     0                                                             BESS1100
G22    TXL     R4,0,*                                                        BESS1110
R3     CLA     COMMON+16                                                     BESS1120
       FDP     COMMON+15                                                     BESS1130
       STQ     COMMON                                                        BESS1140
       CALL ATAN(COMMON)                                                     BESS1150
       LDQ     COMMON+15                                                     BESS1160
       TQP     R4                                                            BESS1170
       STO     COMMON                                                        BESS1180
       CLA     LPI                                                           BESS1190
       LDQ     COMMON+16                                                     BESS1200
       LLS     0                                                             BESS1210
```

```
        FAD     COMMON                                                  BESS1220
R4      STO     COMMON+9                                                BESS1230
        LXA     COMMON+17,1                                             BESS1240
        CLA     0,1                                                     BESS1250
        LDQ     1,1                                                     BESS1260
        TSX     MULT,4                                                  BESS1270
        STO     COMMON+4                                                BESS1280
        STO     COMMON+5                                                BESS1290
        STZ     COMMON+8                                                BESS1300
        STZ     COMMON+9                                                BESS1310
        LXD     A38,2                                                   BESS1320
        SXD     B68,2                                                   BESS1330
B63     CLA     LOC1                                                    BESS1340
R10     STO     COMMON+6                                                BESS1350
        FAD     LOC1                                                    BESS1360
        STO     COMMON+7                                                BESS1370
        CLA     8,1                                                     BESS1380
B64     FDP     COMMON+7                                                BESS1390
        STQ     COMMON+10                                               BESS1400
        CLA     4,1                                                     BESS1410
        FDP     COMMON+6                                                BESS1420
        STQ     COMMON+11                                               BESS1430
        CLA     COMMON+11                                               BESS1440
B65     FSB     COMMON+10                                               BESS1450
        FAD     COMMON+8                                                BESS1460
        STO     COMMON+8                                                BESS1470
        CLA     9,1                                                     BESS1480
B66     FDP     COMMON+7                                                BESS1490
        STQ     COMMON+11                                               BESS1500
        CLA     5,1                                                     BESS1510
        FDP     COMMON+6                                                BESS1520
        STQ     COMMON+10                                               BESS1530
        CLA     COMMON+10                                               BESS1540
B67     FSB     COMMON+11                                               BESS1550
        FAD     COMMON+9                                                BESS1560
        STO     COMMON+9                                                BESS1570
        CLA     COMMON+6                                                BESS1580
        FAD     LOC2                                                    BESS1590
        TXI     B68,1,-8                                                BESS1600
B68     TXH     R10,1,*                                                 BESS1610
Z60     LDQ     COMMON+8                                                BESS1620
        FMP     LOC2                                                    BESS1630
        FAD     COMMON+4                                                BESS1640
        XCA                                                             BESS1650
        FMP     TVPI                                                    BESS1660
        LXD     COMMON+17,2                                             BESS1670
        LXA     COMMON+17,1                                             BESS1680
        STO     0,2             RVZ                                     BESS1690
        LDQ     COMMON+9                                                BESS1700
        FMP     LOC2                                                    BESS1710
        FAD     COMMON+5                                                BESS1720
        XCA                                                             BESS1730
        FMP     TVPI                                                    BESS1740
        STO     1,2             IVZ                                     BESS1750
        LXD     G22,4                                                   BESS1760
        CLA     2,4                                                     BESS1770
        TZE     EXIT                                                    BESS1780
        TSX     YM2,4                                                   BESS1790
        LXD     G22,4                                                   BESS1800
        CLA     2,4                                                     BESS1810
        LRS     1                                                       BESS1820
        TZE     EXIT                                                    BESS1830
        LLS     1                                                       BESS1840
        COM                                                             BESS1850
        ACL     L1                                                      BESS1860
        ALS     19                                                      BESS1870
        ACL     COMMON+17       -L(VSUBN)                               BESS1880
        TXI     AB80,1,-2                                               BESS1890
AB80    TXI     B71,2,-2                                                BESS1900
B71     STD     R15                                                     BESS1910
        STD     B75                                                     BESS1920
        CLA     COMMON+16                                               BESS1930
        LDQ     LSIX                                                    BESS1940
        LLS     0                                                       BESS1950
        TLQ     METH2                                                   BESS1960
        CLA     LZ                                                      BESS1970
R14     FAD     LOC1                                                    BESS1980
        STO     COMMON+5                                                BESS1990
        ACL     C2                                                      BESS2000
        STO     COMMON+8                                                BESS2010
        STZ     COMMON+9                                                BESS2020
        CLA     COMMON+15                                               BESS2030
        LDQ     COMMON+16                                               BESS2040
        TSX     DIV,4                                                   BESS2050
        STO     COMMON+6                                                BESS2060
        STQ     COMMON+9                                                BESS2070
        CLA     0,2                                                     BESS2080
        LDQ     1,2                                                     BESS2090
        TSX     MULT,4                                                  BESS2100
        STQ     COMMON+8                                                BESS2110
F21     FSB     0-2,2                                                   BESS2120
        STO     2,2                                                     BESS2130
        CLA     COMMON+8                                                BESS2140
        FSB     0-1,2                                                   BESS2150
        STO     3,2                                                     BESS2160
        CLA     COMMON+5                                                BESS2170
        TXI     R15,2,-2                                                BESS2180
R15     TXH     R14,2,*                                                 BESS2190
YMX     TXL     EXIT,0,*                                                BESS2200
METH2   TSX     YM22,4                                                  BESS2210
        TXI     B74,1,-2                                                BESS2220
B74     TXI     B75,2,-2                                                BESS2230
B75     TXH     METH2,2,*                                               BESS2240
EXIT    LXD     G22,4                                                   BESS2250
        TRA     BF8                                                     BESS2260
B80     LXD     G21,2                                                   BESS2270
        LXD     G20,1                                                   BESS2280
        CLA     CL                                                      BESS2290
        STO     0                                                       BESS2300
        CLA     CL+1                                                    BESS2310
        STO     8                                                       BESS2320
        TRA     4,4                                                     BESS2330
BF8X    CLA     COMMON+15                                               BESS2340
        LDQ     COMMON+16                                               BESS2350
        LXD     G22,4                                                   BESS2360
        TXI     B80,4,1                                                 BESS2370
YM2     SXD     YMX,4                                                   BESS2380
        CLA     TVPI                                                    BESS2390
        STO     COMMON+8                                                BESS2400
        STZ     COMMON+9                                                BESS2410
        CLA     COMMON+19                                               BESS2420
```

```
        LDQ     COMMON+16                                       BESS2430
        TSX     DIV,4                                           BESS2440
        STO     COMMON+6                                        BESS2450
        STQ     COMMON+7                                        BESS2460
        TRA     YM5                                             BESS2470
YM22    SXD     YMX,4                                           BESS2480
YM5     CLA     COMMON+6                                        BESS2490
        LDQ     COMMON+7                                        BESS2500
        STO     COMMON+8                                        BESS2510
        STQ     COMMON+9                                        BESS2520
        CLA     0,1                                             BESS2530
        LDQ     1,1                                             BESS2540
        TSX     DIV,4                                           BESS2550
        STO     COMMON                                          BESS2560
        STQ     COMMON+1                                        BESS2570
        CLA     2,1                                             BESS2580
        STO     COMMON+8                                        BESS2590
        CLA     3,1                                             BESS2600
        STO     COMMON+9                                        BESS2610
        CLA     0,1                                             BESS2620
        LDQ     1,1                                             BESS2630
        TSX     DIV,4                                           BESS2640
        STO     COMMON+8                                        BESS2650
        STQ     COMMON+9                                        BESS2660
        CLA     0,2                                             BESS2670
        LDQ     1,2                                             BESS2680
        TSX     MULT,4                                          BESS2690
        STQ     COMMON+3                                        BESS2700
        FSB     COMMON                                          BESS2710
        STO     2,2                                             BESS2720
        CLA     COMMON+3                                        BESS2730
        FSB     COMMON+1                                        BESS2740
        STO     3,2                                             BESS2750
        LXD     YMX,4                                           BESS2760
        TRA     1,4                                             BESS2770
LOC4    DEC     4.                                              BESS2780
L11     OCT     1000001                                         BESS2790
OILER   DEC     .5772156649                                     BESS2800
LSIX    DEC     6.                                              BESS2810
PIV2    DEC     1.570796325                                     BESS2820
LPI     DEC     3.14159265                                      BESS2830
TVPI    DEC     .63661977236                                    BESS2840
CL      BSS     2                                               BESS2850
BF8     LDI     BF81                                            BESS2860
        CLA     1,4                                             BESS2870
        TPL     B80             EXIT                            BESS2880
        STA     BF82            L(J)                            BESS2890
        ACL     BF84                                            BESS2900
        STA     BF82+1          L(J)+1                          BESS2910
        ARS     18                                              BESS2920
        STA     BF83            L(Y)                            BESS2930
        ACL     BF84                                            BESS2940
        STA     BF83+1          L(Y)+1                          BESS2950
        CAL     2,4                                             BESS2960
        ADD     BF84                                            BESS2970
        PAX     ,1                                              BESS2980
        AXT     0,2                                             BESS2990
BF86    CLS*    BF82+1          -IJ                             BESS3000
        FSB*    BF83            -RY                             BESS3010
        XCA                                                     BESS3020
        FMP     BF85                                            BESS3030
        STO*    BF83            RK0                             BESS3040
        CLA*    BF82            RJ                              BESS3050
        FSB*    BF83+1          -IY                             BESS3060
        XCA                                                     BESS3070
        FMP     BF85                                            BESS3080
        STO*    BF83+1          IK0                             BESS3090
        TNX     B80,1,1                                         BESS3100
        TXI     BESS9,2,-2                                      BESS3110
BESS9   CLS*    BF82            -RJ                             BESS3120
        FAD*    BF83+1          IY                              BESS3130
        XCA                                                     BESS3140
        FMP     BF85                                            BESS3150
        XCA                                                     BESS3160
        CLS*    BF83            -RY                             BESS3170
        STQ*    BF83            RK1                             BESS3180
        FSB*    BF82+1          -IJ                             BESS3190
        XCA                                                     BESS3200
        FMP     BF85                                            BESS3210
        STO*    BF83+1          IK1                             BESS3220
        CLS*    BF82                                            BESS3230
        LDQ*    BF82+1                                          BESS3240
        STO*    BF82+1                                          BESS3250
        STQ*    BF82                                            BESS3260
        TNX     B80,1,1                                         BESS3270
        TXI     BESS6,2,-2                                      BESS3280
BESS6   CLA*    BF82+1          IJ                              BESS3290
        FAD*    BF83            RY                              BESS3300
        XCA                                                     BESS3310
        FMP     BF85                                            BESS3320
        STO*    BF83            RK2                             BESS3330
        CLS*    BF82            -RJ                             BESS3340
        STO*    BF82                                            BESS3350
        FAD*    BF83+1          IY                              BESS3360
        XCA                                                     BESS3370
        FMP     BF85                                            BESS3380
        STO*    BF83+1                                          BESS3390
        CLS*    BF82+1                                          BESS3400
        STO*    BF82+1                                          BESS3410
        TNX     B80,1,1                                         BESS3420
        TXI     BESS7,2,-2                                      BESS3430
BESS7   CLA*    BF82            RJ                              BESS3440
        FSB*    BF83+1          -IY                             BESS3450
        XCA                                                     BESS3460
        FMP     BF85                                            BESS3470
        XCA                                                     BESS3480
        CLA*    BF83            RY                              BESS3490
        STQ*    BF83            RK3                             BESS3500
        FAD*    BF82+1          IJ                              BESS3510
        XCA                                                     BESS3520
        FMP     BF85                                            BESS3530
        STO*    BF83+1          IK3                             BESS3540
        CLS*    BF82+1                                          BESS3550
        LDQ*    BF82                                            BESS3560
        STO*    BF82                                            BESS3570
        STQ*    BF82+1                                          BESS3580
        TNX     B80,1,1                                         BESS3590
        TXI     BF86,2,-2                                       BESS3600
BF81    PZE     **0             INDICATORS                      BESS3610
BF82    PZE     **0,2           L(J)                            BESS3620
        PZE     **0,2                                           BESS3630
```

```
BF83    PZE     **0,2           L(Y)                                    BESS3640
        PZE     **0,2                                                   BESS3650
BF84    DEC 1                                                           BESS3660
BF85    DEC 1.57079633            PI/2                                  BESS3670
BF7F    STO     COMMON+5                                                BESS3680
        STQ     COMMON+6                                                BESS3690
        SXD     XR4,4                                                   BESS3700
        SXD     COMMON+14,2                                             BESS3710
        SXD     XR1,1                                                   BESS3720
        CLA     0                                                       BESS3730
        STO     LFST                                                    BESS3740
        CLA     8                                                       BESS3750
        STO     LFST+1                                                  BESS3760
        CLA     TRA1                                                    BESS3770
        STO     8                                                       BESS3780
        EFTM                                                            BESS3790
        CLA     1,4                                                     BESS3800
        TPL     A21                                                     BESS3810
        CLS     COMMON+6                                                BESS3820
        LDQ     COMMON+5                                                BESS3830
        STQ     COMMON+6                                                BESS3840
        STO     COMMON+5                                                BESS3850
A21     CLA     COMMON+5                                                BESS3860
        LDQ     SMCON                                                   BESS3870
        LLS     0                                                       BESS3880
        TLQ     A53                                                     BESS3890
        LDQ     TEN                                                     BESS3900
XR1     TXL     A119,0,*                                                BESS3910
A53     CLA     COMMON+6                                                BESS3920
F23     FDP     COMMON+5                                                BESS3930
A119    CLA     LTN5                                                    BESS3940
        LRS     0                                                       BESS3950
        STQ     COMMON+7          TAN(ARG)                              BESS3960
        TLQ     F1                                                      BESS3970
A22     CLA     COMMON+6                                                BESS3980
        TSX     HY3F,4                                                  BESS3990
XR4     TXL     ERR2,0,*                                                BESS4000
        STO     COMMON+3                                                BESS4010
        STO     COMMON+4                                                BESS4020
        CLA     COMMON+5                                                BESS4030
        CALL COS(COMMON+5)                                              BESS4040
        XCA                                                             BESS4050
F24     FMP     COMMON+3                                                BESS4060
        STO     COMMON+3          R(COS(Z))                             BESS4070
        CLA     COMMON+5                                                BESS4080
        CALL SIN(COMMON+5)                                              BESS4090
        XCA                                                             BESS4100
F25     FMP     COMMON+4                                                BESS4110
        CHS                                                             BESS4120
        STO     COMMON+4          I(COS(Z))                             BESS4130
F1      CLA     COMMON+5                                                BESS4140
        LDQ     COMMON+6                                                BESS4150
        SSP                                                             BESS4160
        LRS     0                                                       BESS4170
        TLQ     A23                                                     BESS4180
        XCA                                                             BESS4190
A23     STO     COMMON+9                                                BESS4200
        XCA                                                             BESS4210
        FMP     L3V2                                                    BESS4220
        STO     COMMON+8          3/2P                                  BESS4230
        LXD     XR4,4                                                   BESS4240
        CAL     1,4                                                     BESS4250
        COM                                                             BESS4260
        ACL     L1                                                      BESS4270
        STA     COMMON            (-J)                                  BESS4280
        ALS     18                                                      BESS4290
        STD     A10                                                     BESS4300
        CLA     1,4                                                     BESS4310
        ARS     18                                                      BESS4320
        SSP                                                             BESS4330
        ADD     C1                                                      BESS4340
        FAD     C1                FLOATING N                            BESS4350
        LDQ     COMMON+8                                                BESS4360
        TLQ     A24                                                     BESS4370
        CLA     COMMON+8                                                BESS4380
A24     FAD     TEN                                                     BESS4390
        UFA     C1                N PRIME=MAX(3/2P,N)+10                BESS4400
        STO     COMMON+10                                               BESS4410
        FAD     C1                                                      BESS4420
        STO     COMMON+1                                                BESS4430
        CAL     COMMON+10                                               BESS4440
        ALS     1                                                       BESS4450
        COM                                                             BESS4460
        ADM     L1                                                      BESS4470
        ADM     COMMON                                                  BESS4480
        STA     COMMON+2                                                BESS4490
        ALS     18                                                      BESS4500
        STD     A41               -(J+2NPR+2)                           BESS4510
        STD     A32                                                     BESS4520
        STD     A45                                                     BESS4530
        STD     A38                                                     BESS4540
        CLA     COMMON+9                                                BESS4550
        TZE     BF7X                                                    BESS4560
        CLA     COMMON+6                                                BESS4570
        SSP                                                             BESS4580
        LDQ     LOC25                                                   BESS4590
        TLQ     A68                                                     BESS4600
        CLA     AZ                                                      BESS4610
        TRA     A69                                                     BESS4620
A68     CLA     AZ1                                                     BESS4630
A69     LXA     COMMON+2,1                                              BESS4640
        STO     2,1                                                     BESS4650
        STO     3,1                                                     BESS4660
        STZ     4,1                                                     BESS4670
        STZ     5,1                                                     BESS4680
        CLA     COMMON+1                                                BESS4690
        FAD     LOC1                                                    BESS4700
BF7Y    STO     COMMON+1                                                BESS4710
        ACL     C2                                                      BESS4720
        STO     COMMON+8                                                BESS4730
        STZ     COMMON+9                                                BESS4740
        CLA     2,1                                                     BESS4750
        LDQ     3,1                                                     BESS4760
        TSX     MULT,4                                                  BESS4770
        STO     COMMON+8                                                BESS4780
        STQ     COMMON+9                                                BESS4790
        CLA     COMMON+5                                                BESS4800
        LDQ     COMMON+6                                                BESS4810
        TSX     DIV,4                                                   BESS4820
        STQ     COMMON+10                                               BESS4830
FF20    FSB     4,1                                                     BESS4840
```

```
        STO     0,1                                                     BESS4850
        CLA     COMMON+10                                               BESS4860
        FSB     0,1                                                     BESS4870
        STO     1,1                                                     BESS4880
        CLA     COMMON+1                                                BESS4890
        FSB     LOC1                                                    BESS4900
        TXI     A10,1,2                                                 BESS4910
A10     TXL     BF7Y,1,*        -J                                      BESS4920
        CLA     LTN5                                                    BESS4930
A64     LDQ     COMMON+7                                                BESS4940
        LXA     COMMON,1                                                BESS4950
        STZ     COMMON+10                                               BESS4960
        STZ     COMMON+11                                               BESS4970
        TLQ     A60                                                     BESS4980
        CLA     LFSB4                                                   BESS4990
        TRA     A61                                                     BESS5000
A60     CLA     LFAD4                                                   BESS5010
A61     STO     A62                                                     BESS5020
        ACL     L1                                                      BESS5030
        STO     A63                                                     BESS5040
A65     CLA     0,1                                                     BESS5050
A62     HPR                                                             BESS5060
        FAD     COMMON+10                                               BESS5070
        STO     COMMON+10                                               BESS5080
        CLA     1,1                                                     BESS5090
A63     HPR                                                             BESS5100
        [illegible]     COMMON+11                                       BESS5110
        STO     COMMON+11                                               BESS5120
        TXI     A32,1,-8                                                BESS5130
A32     TXH     A65,1,*                                                 BESS5140
        LXA     COMMON,1                                                BESS5150
        XCA                                                             BESS5160
        FMP     LOC2                                                    BESS5170
        FSB     1,1                                                     BESS5180
        STO     COMMON+11                                               BESS5190
        LDQ     COMMON+10                                               BESS5200
        FMP     LOC2                                                    BESS5210
        FSB     0,1                                                     BESS5220
        STO     COMMON+10                                               BESS5230
        CLA     COMMON+7                                                BESS5240
        LDQ     LTN5                                                    BESS5250
        TLQ     A33                                                     BESS5260
        CLA     LOC1                                                    BESS5270
        STO     COMMON+3                                                BESS5280
        STZ     COMMON+4                                                BESS5290
A33     CLA     COMMON+3                                                BESS5300
        LDQ     COMMON+4                                                BESS5310
        STO     COMMON+8                                                BESS5320
        STQ     COMMON+9                                                BESS5330
        CLA     COMMON+10                                               BESS5340
        LDQ     COMMON+11                                               BESS5350
        TSX     DIV+2,4                                                 BESS5360
        STO     COMMON+8                                                BESS5370
        STQ     COMMON+9                                                BESS5380
A34     CLA     0,1                                                     BESS5390
        LDQ     1,1                                                     BESS5400
        TSX     MULT,4                                                  BESS5410
        STO     0,1                                                     BESS5420
        STQ     1,1                                                     BESS5430
        TXI     A45,1,-2                                                BESS5440
A45     TXH     A34,1,*                                                 BESS5450
        LXA     COMMON+2,1                                              BESS5460
        LXD     LZ,2                                                    BESS5470
A37     STZ     0,1                                                     BESS5480
        TXI     A35,2,-1                                                BESS5490
A35     TXI     A36,1,-1                                                BESS5500
A36     TXH     A37,2,-8                                                BESS5510
        LXD     XR4,4                                                   BESS5520
        CLA     1,4                                                     BESS5530
        TPL     D7                                                      BESS5540
        LXA     COMMON,2                                                BESS5550
A39     CLS     2,2                                                     BESS5560
        LDQ     3,2                                                     BESS5570
        STQ     2,2                                                     BESS5580
        STO     3,2                                                     BESS5590
        CLS     4,2                                                     BESS5600
        STO     4,2                                                     BESS5610
        CLS     5,2                                                     BESS5620
        STO     5,2                                                     BESS5630
        CLS     7,2                                                     BESS5640
        LDQ     6,2                                                     BESS5650
        STQ     7,2                                                     BESS5660
        STO     6,2                                                     BESS5670
        TXI     A38,2,-8                                                BESS5680
A38     TXH     A39,2,*                                                 BESS5690
D7      LXD     XR4,4                                                   BESS5700
A40     LXD     COMMON+14,2                                             BESS5710
        LXD     XR1,1                                                   BESS5720
        CLA     LFST                                                    BESS5730
        STO     0                                                       BESS5740
        CLA     LFST+1                                                  BESS5750
        STO     8                                                       BESS5760
        TRA     3,4                                                     BESS5770
FRR2    CLA     COMMON+5                                                BESS5780
        LDQ     COMMON+6                                                BESS5790
        LXD     XR4,4                                                   BESS5800
        TXI     A40,4,1                                                 BESS5810
BF7X    LXA     COMMON,1                                                BESS5820
        CLA     LOC1                                                    BESS5830
        STO     0,1                                                     BESS5840
A42     STZ     1,1                                                     BESS5850
        TXI     A41,1,-1                                                BESS5860
A41     TXH     A42,1,*                                                 BESS5870
MULX    TXL     D7,0,*                                                  BESS5880
DIV     STO     COMMON+10                                               BESS5890
        STQ     COMMON+11                                               BESS5900
        SSP                                                             BESS5910
        LRS     0                                                       BESS5920
        TLQ     RR1                                                     BESS5930
        XCA                                                             BESS5940
        TZE     FRR2                                                    BESS5950
        CLA     COMMON+10                                               BESS5960
D30     FDP     COMMON+11                                               BESS5970
D32     STQ     COMMON+12       C/D                                     BESS5980
D33     FMP     COMMON+12                                               BESS5990
D34     FAD     LOC1                                                    BESS6000
        XCA                                                             BESS6010
        FMP     COMMON+11                                               BESS6020
        STO     COMMON+13       DEN                                     BESS6030
        LDQ     COMMON+12                                               BESS6040
        FMP     COMMON+8                                                BESS6050
```

```
D35     FAD     COMMON+9                                                BESS6060
F31     FDP     COMMON+13                                               BESS6070
        STQ     COMMON+11                                               BESS6080
        LDQ     COMMON+12                                               BESS6090
D36     FMP     COMMON+9                                                BESS6100
        FSB     COMMON+8                                                BESS6110
DEX     TXL     RR3+0+*                                                 BESS6120
RR1     CLA     COMMON+11                                               BESS6130
D37     FDP     COMMON+10                                               BESS6140
D39     STQ     COMMON+12                                               BESS6150
B88     FMP     COMMON+12                                               BESS6160
D40     FAD     LOC1                                                    BESS6170
        XCA                                                             BESS6180
        FMP     COMMON+10                                               BESS6190
        STO     COMMON+13       DEN                                     BESS6200
        LDQ     COMMON+12                                               BESS6210
        FMP     COMMON+9                                                BESS6220
D41     FAD     COMMON+8                                                BESS6230
F30     FDP     COMMON+13                                               BESS6240
        STQ     COMMON+11                                               BESS6250
        LDQ     COMMON+12                                               BESS6260
D42     FMP     COMMON+8                                                BESS6270
D44     CHS                                                             BESS6280
        FAD     COMMON+9                                                BESS6290
RR3     FDP     COMMON+13                                               BESS6300
        CLA     COMMON+11                                               BESS6310
        TRA     1+4                                                     BESS6320
MULT    STO     COMMON+10                                               BESS6330
        STQ     COMMON+11                                               BESS6340
        FMP     COMMON+9                                                BESS6350
MT1     STO     COMMON+12       BD                                      BESS6360
        LDQ     COMMON+11                                               BESS6370
        FMP     COMMON+8                                                BESS6380
MT2     STO     COMMON+11       AD                                      BESS6390
        LDQ     COMMON+10                                               BESS6400
        FMP     COMMON+8                                                BESS6410
        FSB     COMMON+12                                               BESS6420
MT3     STO     COMMON+12                                               BESS6430
        LDQ     COMMON+10                                               BESS6440
        FMP     COMMON+9                                                BESS6450
        FAD     COMMON+11                                               BESS6460
MT4     XCA                                                             BESS6470
        CLA     COMMON+12                                               BESS6480
        TRA     1+4                                                     BESS6490
SPILL   STO     SVE                                                     BESS6500
        STQ     SVE+1                                                   BESS6510
        CLA     0                                                       BESS6520
        LRS     21                                                      BESS6530
        LBT                                                             BESS6540
        TRA     SP1             FAD+FSB+FMP O+F+ OR U+F+                BESS6550
        RND                     FDP U+F+ OR O+F+                        BESS6560
        LBT                                                             BESS6570
        TRA     ERR2            OVERFLOW                                BESS6580
        LLS     3                                                       BESS6590
        LBT                                                             BESS6600
        TRA     QOK                                                     BESS6610
        LDQ     LZ                                                      BESS6620
        TRA*    0                                                       BESS6630
QOK     LDQ     SVE+1                                                   BESS6640
        TRA*    0                                                       BESS6650
SP1     LLS     1                                                       BESS6660
        LBT                                                             BESS6670
        TRA     SP2                                                     BESS6680
        TRA     ERR2            O+F+                                    BESS6690
SP2     LLS     1                                                       BESS6700
        TZE     OK                                                      BESS6710
        CLA     LZ                                                      BESS6720
        TRA*    0                                                       BESS6730
OK      CLA     SVE                                                     BESS6740
        TRA*    0                                                       BESS6750
SVE     BSS     2                                                       BESS6760
LFST    BSS     2                                                       BESS6770
TRA1    TRA     SPILL                                                   BESS6780
CON2    OCT 200777777777                                                BESS6790
AZ      OCT 1400000000                                                  BESS6800
AZ1     OCT 100400000000                                                BESS6810
TEN     DEC 10+                                                         BESS6820
LOC25   DEC 25+                                                         BESS6830
C1      OCT 233000000000                                                BESS6840
C2      OCT 1000000000                                                  BESS6850
LOC1    DEC 1+                                                          BESS6860
LZ      PZE     0                                                       BESS6870
L1      DEC 1                                                           BESS6880
L2      DEC 2                                                           BESS6890
LTN5    DEC +03492                                                      BESS6900
LOC2    DEC 2+                                                          BESS6910
L3V2    DEC 1+5                                                         BESS6920
LFSB4   FSB     4+1                                                     BESS6930
LFAD4   FAD     4+1                                                     BESS6940
SMCON   OCT 10400000000                                                 BESS6950
HY3F    LAS     HY3F1           10 EXP-4                                BESS6960
        TRA      HY3F1+3        UNDERFLOW IMPOSSIBLE                    BESS6970
HY3F1   TXI      HY3F1+1,0,26531        OCT 1636430..... = 1E-4         BESS6980
        LDQ     HY3F2           SMALL ARGUMENT APPROXIMATION            BESS6990
        TRA     2+4                                                     BESS7000
        STO     COMMON                                                  BESS7010
        SSP                                                             BESS7020
        LDQ     HY3F3           88+028                                  BESS7030
        TLQ     1+4             ERROR                                   BESS7040
        LDQ     HY3F4           LN 2/2                                  BESS7050
        TLQ     HY3FA                                                   BESS7060
        LDQ     COMMON                                                  BESS7070
        FMP     COMMON                                                  BESS7080
        STO     COMMON+1        X SQUARED                               BESS7090
        FAD     HY3F5           30                                      BESS7100
        XCA                                                             BESS7110
        FMP     COMMON+1        X SQ                                    BESS7120
        FAD     HY3F6           360                                     BESS7130
        FDP     HY3F7           720                                     BESS7140
        FMP     COMMON+1        X SQ                                    BESS7150
        FAD     HY3F2           1                                       BESS7160
        STO     COMMON+2        COSH X                                  BESS7170
        CLA     COMMON+1        X SQ                                    BESS7180
        FAD     HY3F8           42                                      BESS7190
        XCA                                                             BESS7200
        FMP     COMMON+1        X SQ                                    BESS7210
        FAD     HY3F9           840                                     BESS7220
        FDP     HY3F10          9040                                    BESS7230
        FMP     COMMON+1        X SQ                                    BESS7240
        XCA                                                             BESS7250
        FMP     COMMON                                                  BESS7260
```

```
        FAD     COMMON                                                  BESS7270
        TRA     HY3FC                                                   BESS7280
HY3FA   LRS     27              COMPUTE EXPONENTIAL                     BESS7290
        SUB     HY3F11                                                  BESS7300
        STA     BESS8                                                   BESS7310
        MPY     HY3F12                                                  BESS7320
BESS8   LRS     *                                                       BESS7330
        ALS     27                                                      BESS7340
        STO     COMMON+4                                                BESS7350
        LRS     4                                                       BESS7360
        STQ     COMMON+1        4.31                                    BESS7370
        MPY     COMMON+1        4.31                                    BESS7380
        STO     COMMON+2        4+4=8.27                                BESS7390
        ADD     HY3F13          8.27                                    BESS7400
        STO     COMMON+3        8.27                                    BESS7410
        CLA     HY3F14          12.23                                   BESS7420
        DVP     COMMON+3        8.27                                    BESS7430
        STO     COMMON+3        4.31                                    BESS7440
        LDQ     COMMON+2        8.27                                    BESS7450
        MPY     HY3F15          0.35                                    BESS7460
        LLS     4               4.31                                    BESS7470
        SUB     COMMON+3        4.31                                    BESS7480
        ADD     HY3F16          4.31                                    BESS7490
        SUB     COMMON+1        4.31                                    BESS7500
        STO     COMMON+3        4.31                                    BESS7510
        CLA     COMMON+1        9.31 (2P)                               BESS7520
        LDQ     HY3F2                                                   BESS7530
        VDP     COMMON+3.0.27                                           BESS7540
        XCA                                                             BESS7550
        ORA     HY3F17                                                  BESS7560
        FAD     HY3F2                                                   BESS7570
        ADD     COMMON+4                                                BESS7580
        SUB     HY3F18          EXP X IN AC, DIVIDE BY 2                BESS7590
        STO     COMMON+4                                                BESS7600
        CLA     HY3F19          1/4                                     BESS7610
        FDP     COMMON+4        EXP X/2                                 BESS7620
        STQ     COMMON+1        EXP -X 12                               BESS7630
        XCA                                                             BESS7640
        FAD     COMMON+4                                                BESS7650
        STO     COMMON+2                                                BESS7660
        CLA     COMMON+4                                                BESS7670
        FSB     COMMON+1        SIN X IN AC                             BESS7680
        LDQ     COMMON                                                  BESS7690
        LLS     0               SINH X IN AC                            BESS7700
HY3FC   LDQ     COMMON+2                                                BESS7710
        TRA     2,4             EXIT                                    BESS7720
HY3F2   DEC 1.                                                          BESS7730
HY3F3   DEC 88.028                                                      BESS7740
HY3F4   OCT 177542710900                LN 2/2, ERROR = 0.00000000095   BESS7750
HY3F5   DEC 30.                                                         BESS7760
HY3F6   DEC 360.                                                        BESS7770
HY3F7   DEC 720.                                                        BESS7780
HY3F8   DEC 42.                                                         BESS7790
HY3F9   DEC 840.                                                        BESS7800
HY3F10  DEC 5040.                                                       BESS7810
HY3F11  OCT 242                                                         BESS7820
HY3F12  DEC 1.442695040981                                              BESS7830
HY3F13  DEC 87.417497202BB      A                                       BESS7840
HY3F14  DEC 617.9722695B12      B                                       BESS7850
HY3F15  DEC 0.03465735903B0     C                                       BESS7860
HY3F16  DEC 9.954995787IR4      D                                       BESS7870
HY3F17  OCT 201000000000                                                BESS7880
HY3F18  OCT 1000000000                                                  BESS7890
HY3F19  DEC 0.25                                                        BESS7900
        END                                                             BESS7910


$ENTRY V8050


$DATA
```

"MAIN" PROGRAM, DECK = V8050

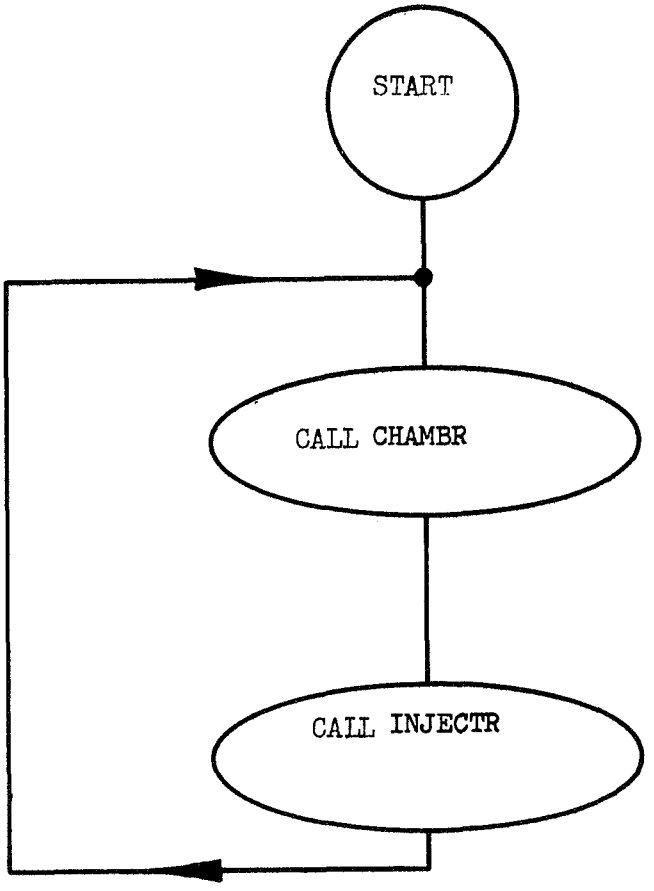

NOTE: SUBROUTINE CHAMBER PERFORMS MOST OF THE LOGICAL AND CONTROL FUNCTIONS OF AN AUTONOMOUS MAIN PROGRAM. CONTROL IS RETURNED TO THIS PROGRAM IF AND ONLY IF AN INJECTOR ROUTINE IS REQUIRED.

ENTRY = CHAMBR

DECK = CHAMBR

1 of 3

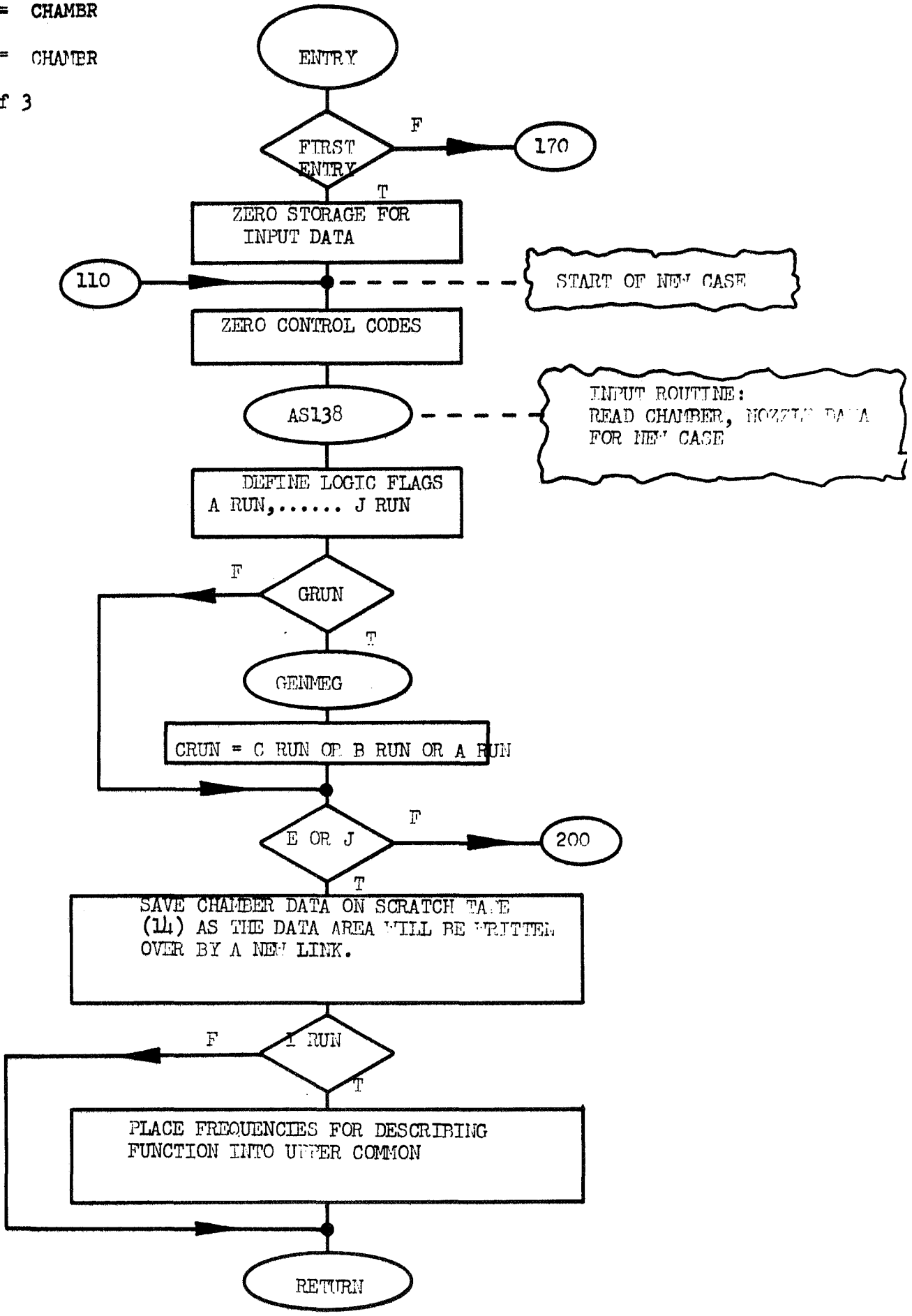

DECK = CHAMBER
2 of 3

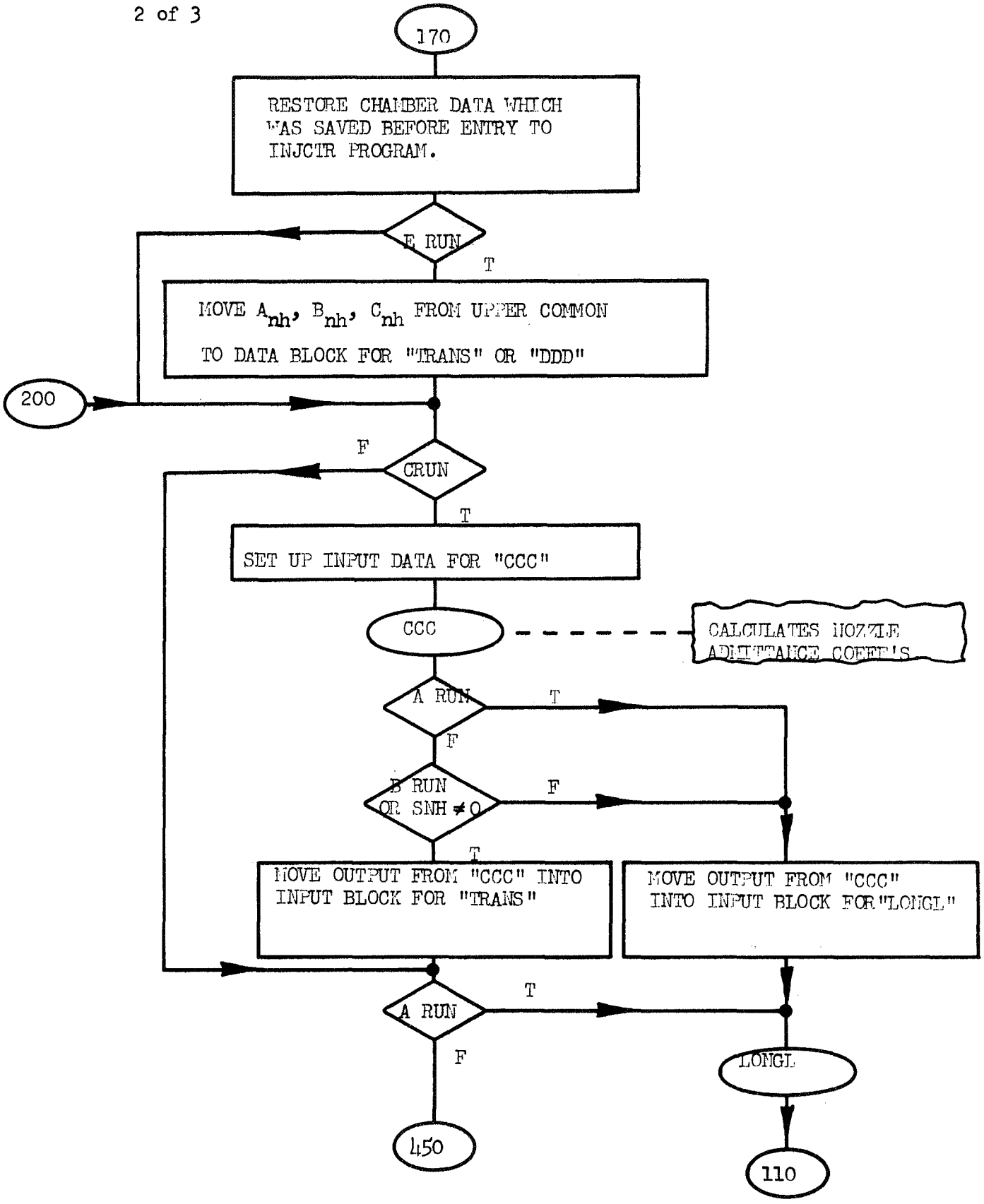

DECK = CHAMBER

3 of 3

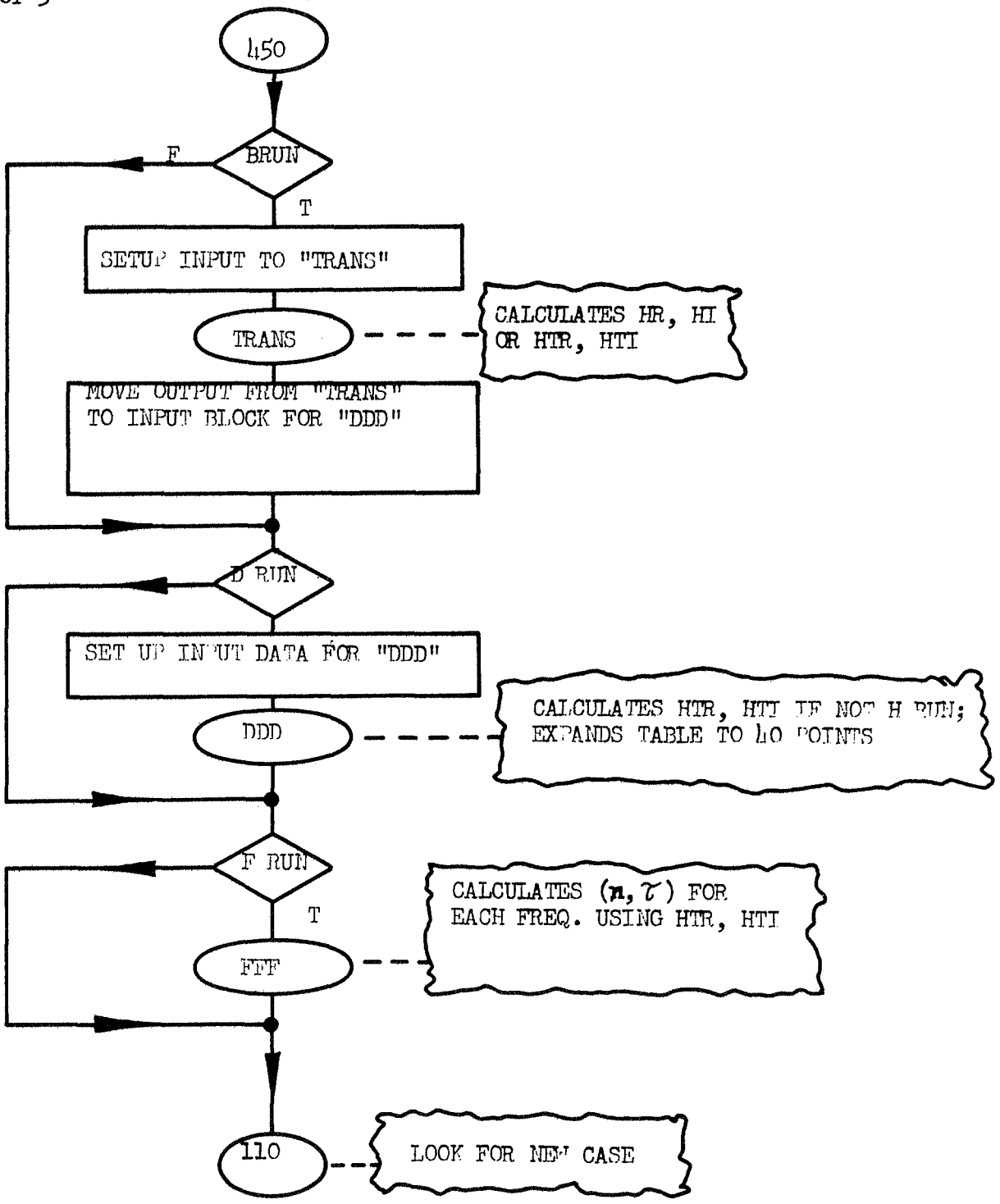

ENTRY = GEMMEG

DECK = WGEN

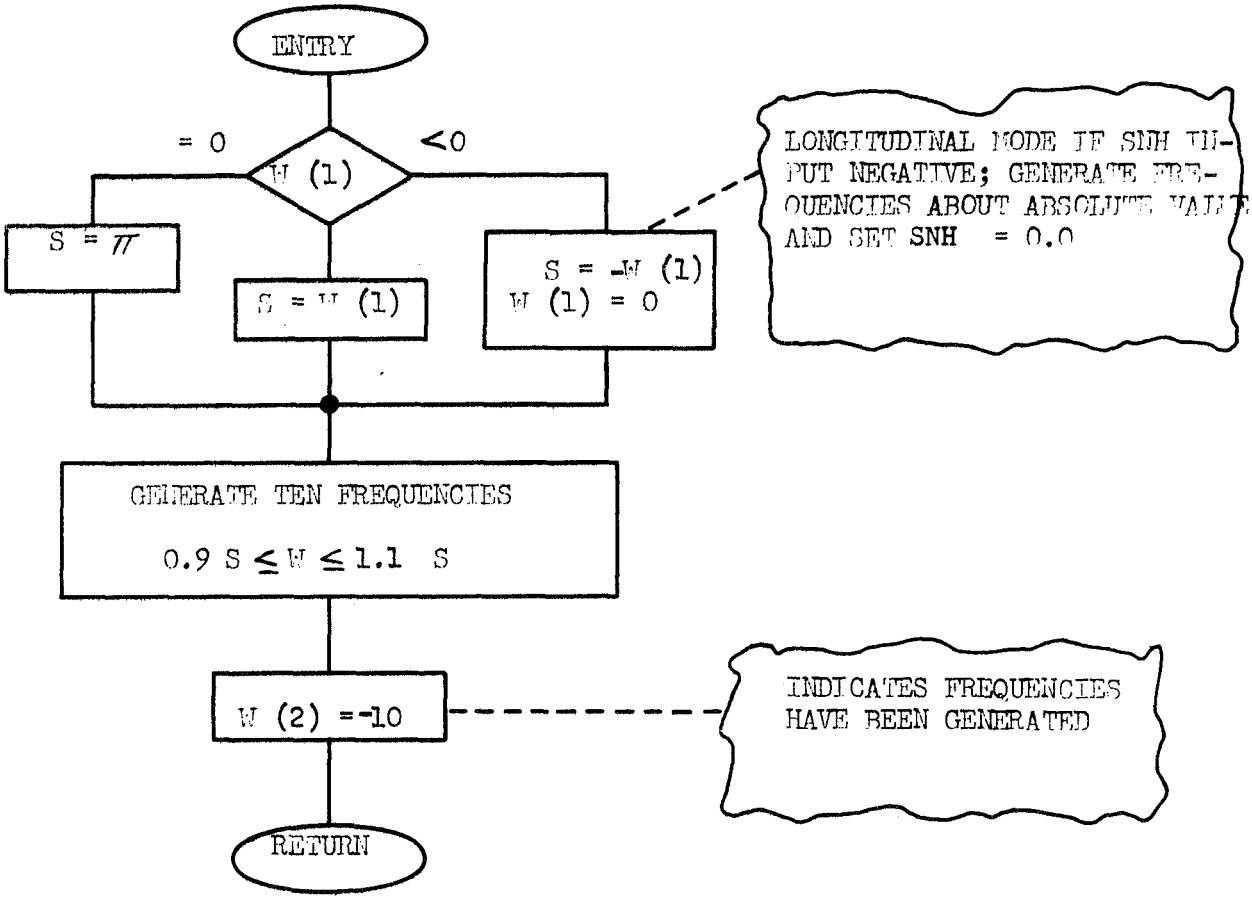

ENTRY = TRANS

DECK = HYMN

1 of 2

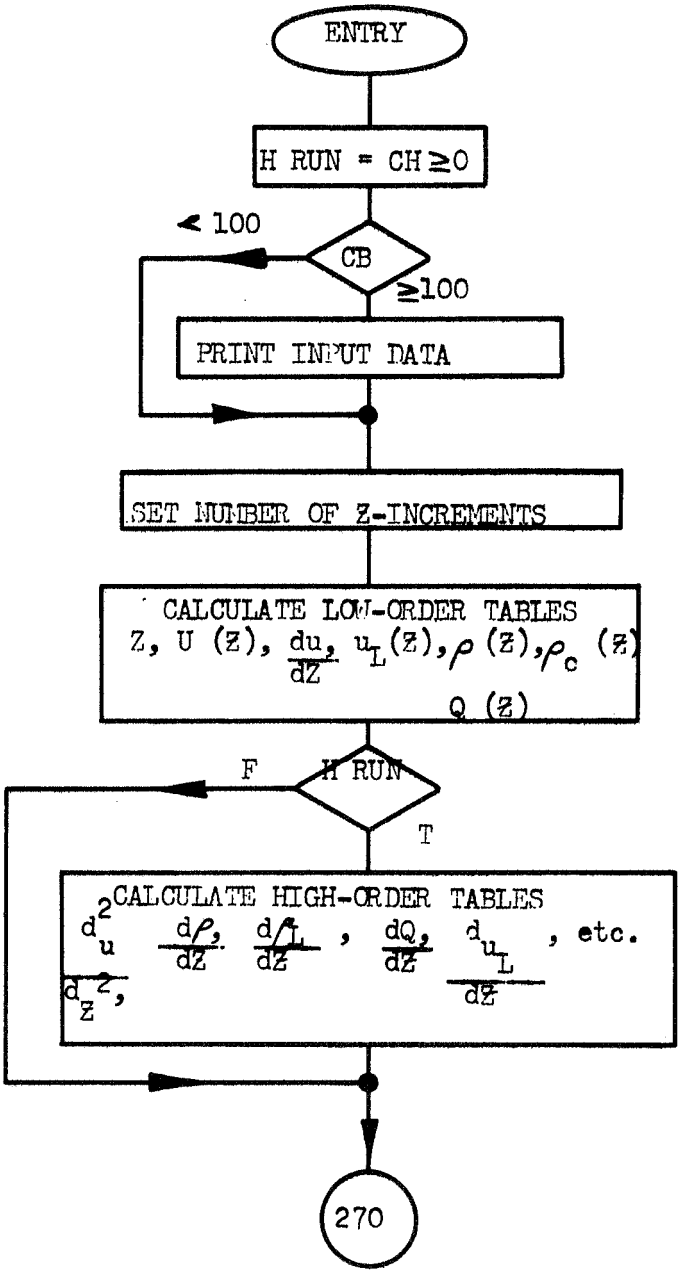

DECK = HYMN

2 of 2

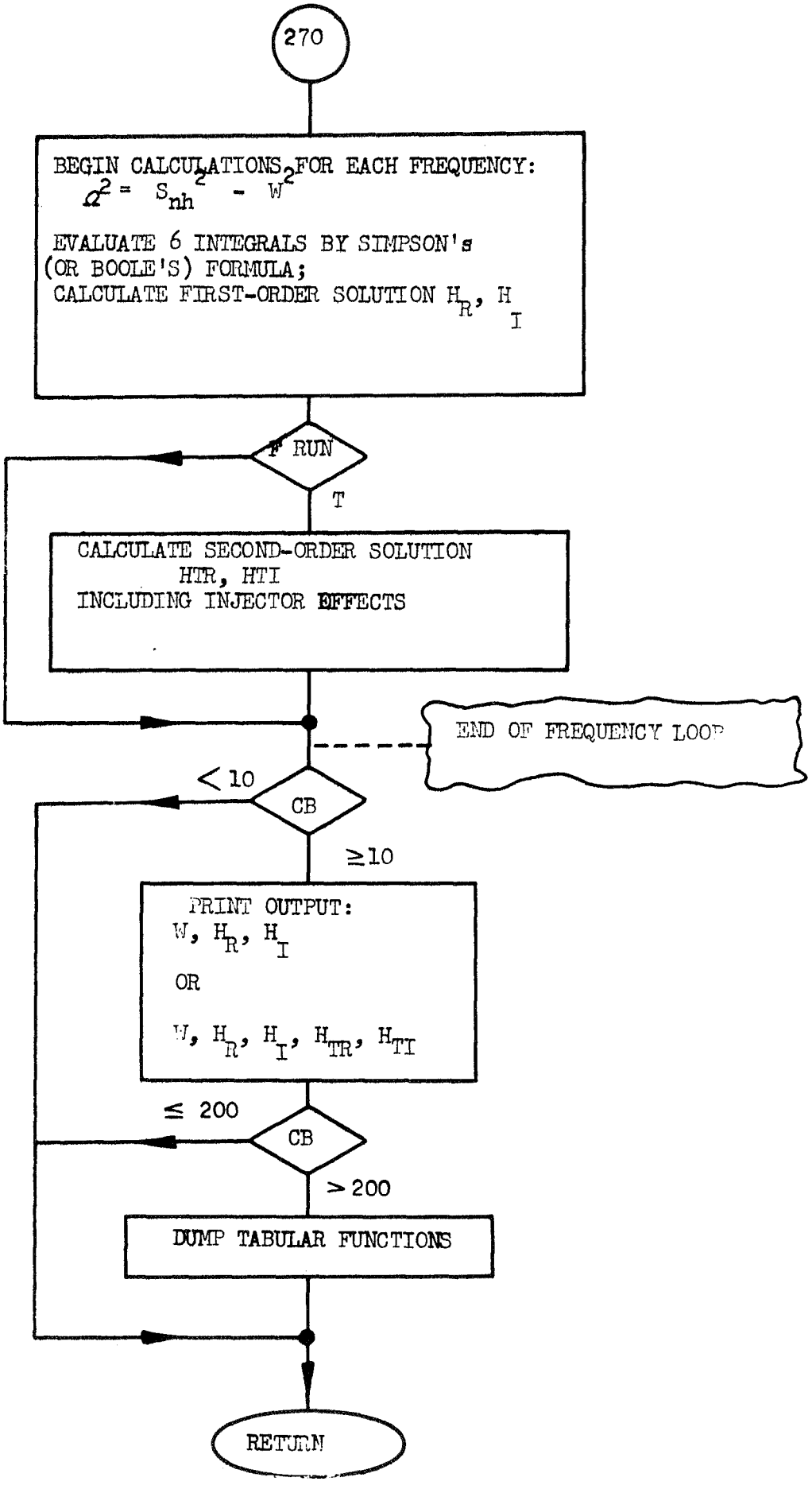

ENTRY = DDD
DECK = HTINT

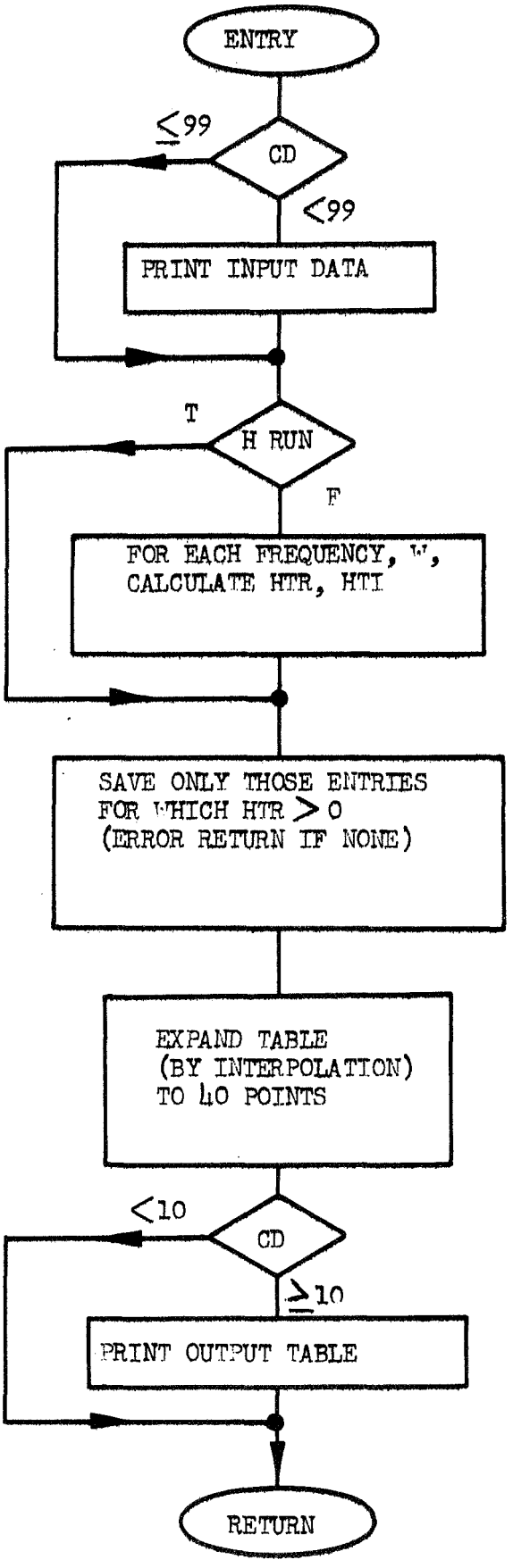

ENTRY = CCC
DECK = NØZMIT

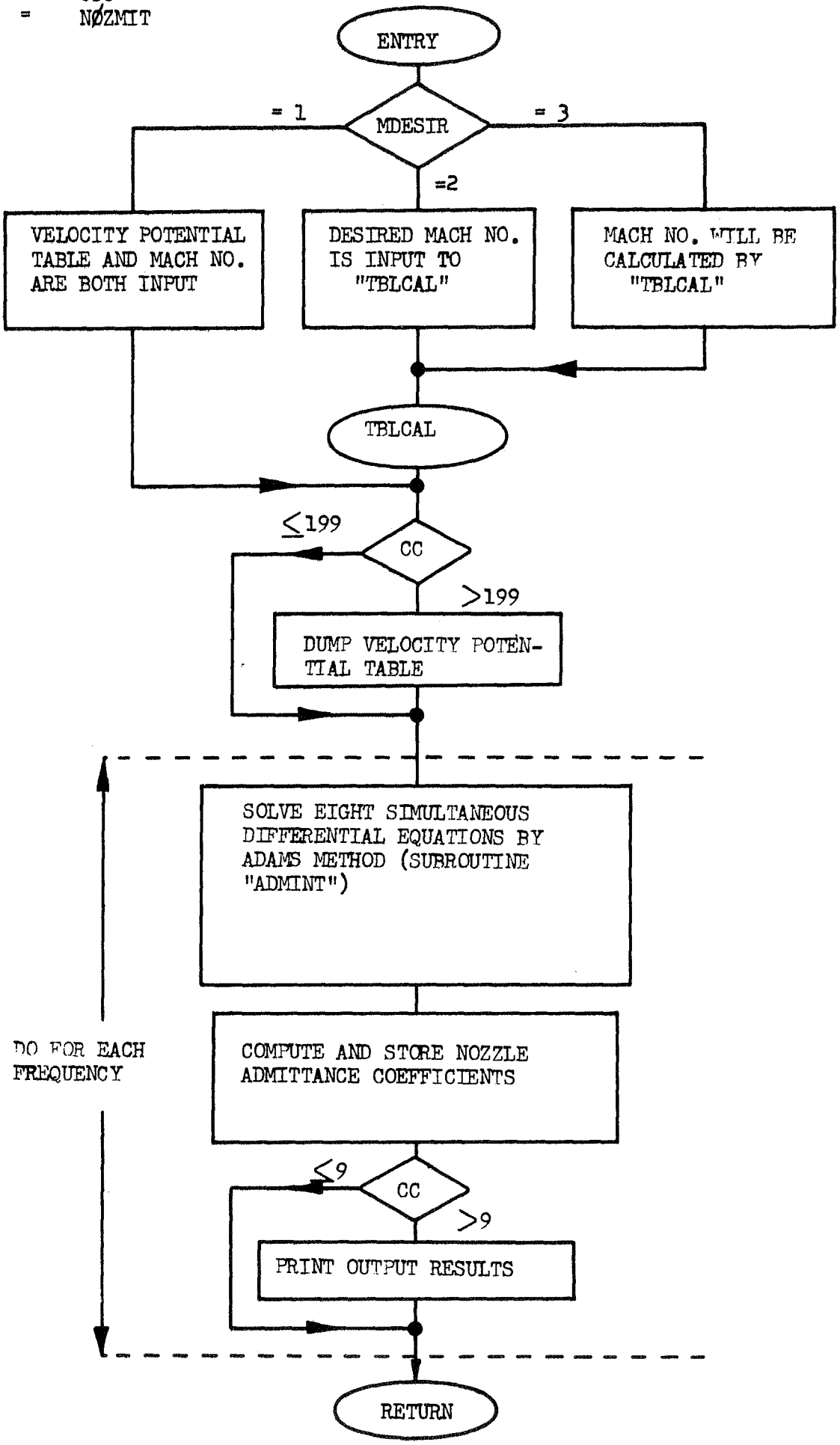

ENTRY = TBLCAL
DECK = VELPØT

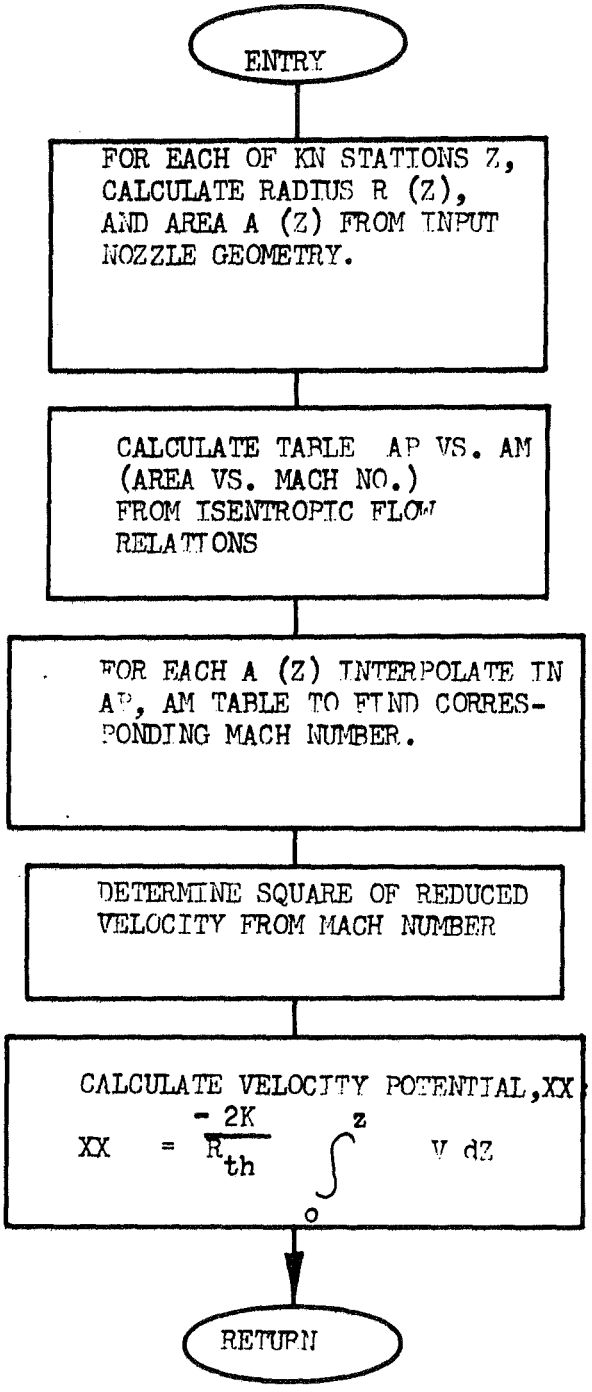

ENTRY = LØNGL
DECK = LØNGIT

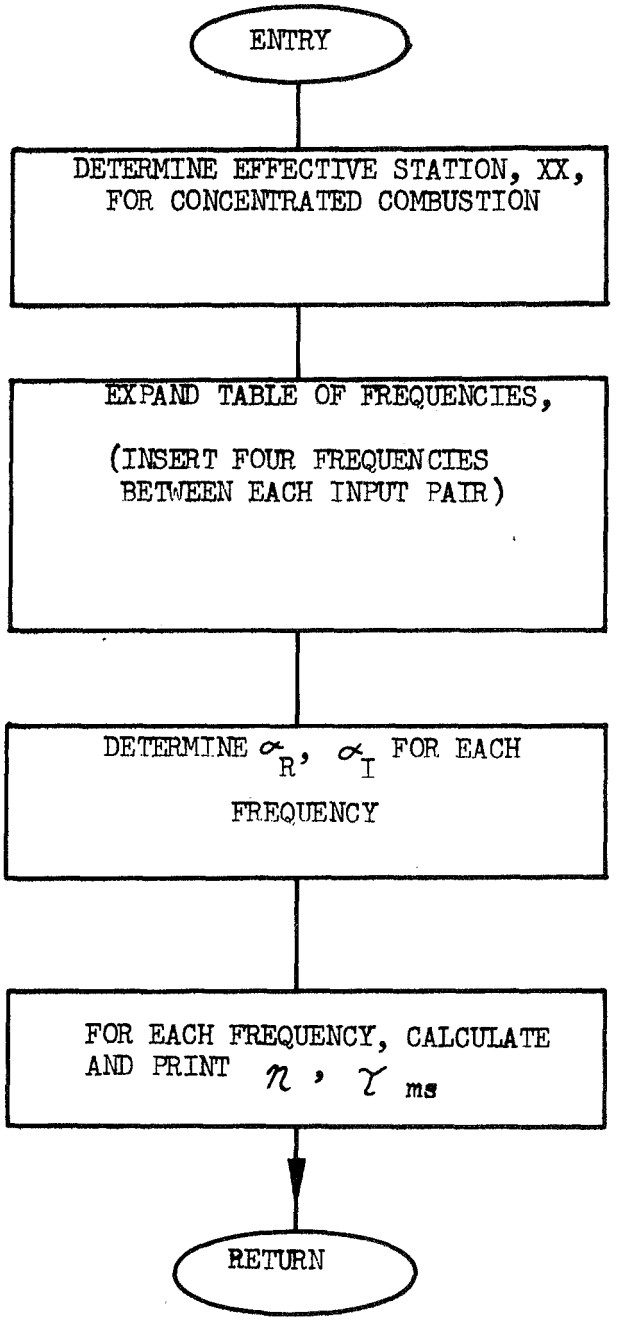

ENTRY = FFF
DECK = NTAU

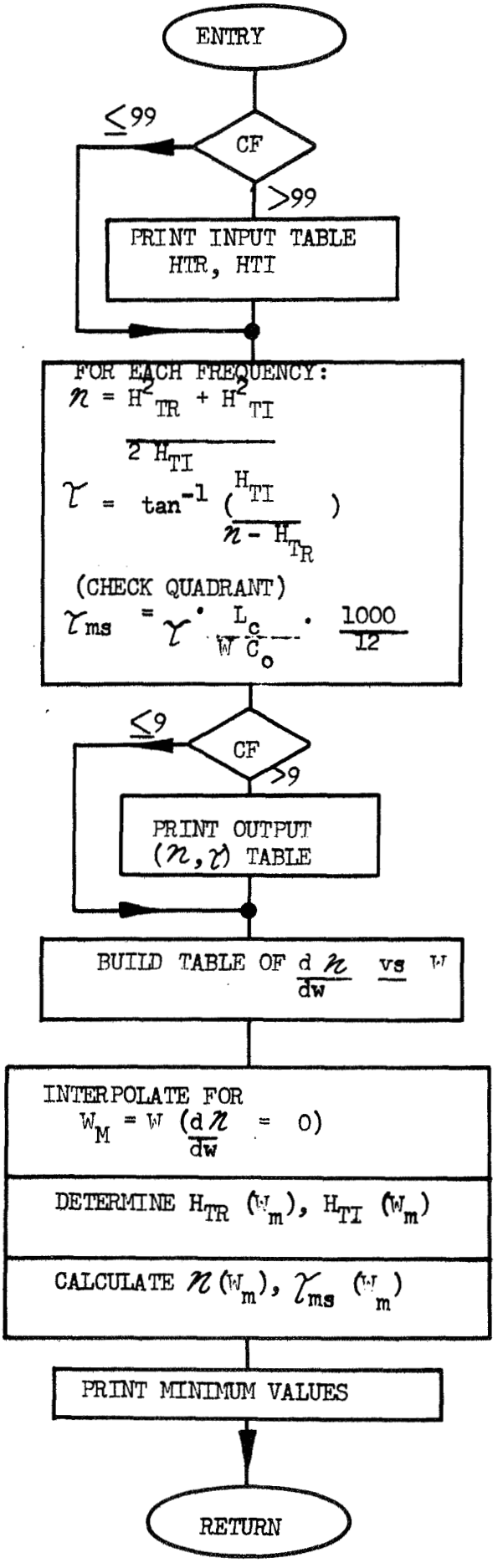

ENTRY = INJCTR
DECK = INJ

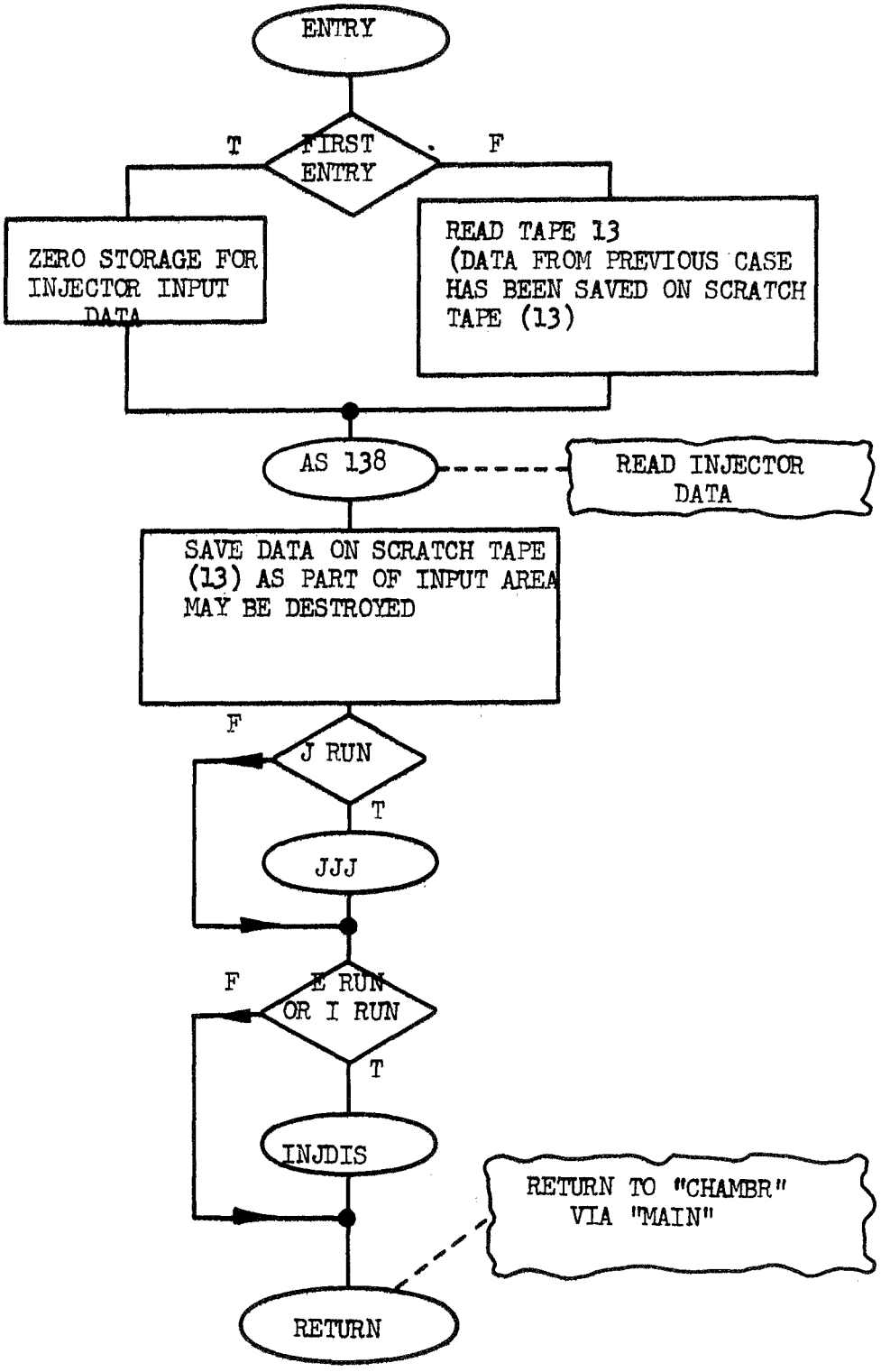

ENTRY = JJJ
DECK = JECT

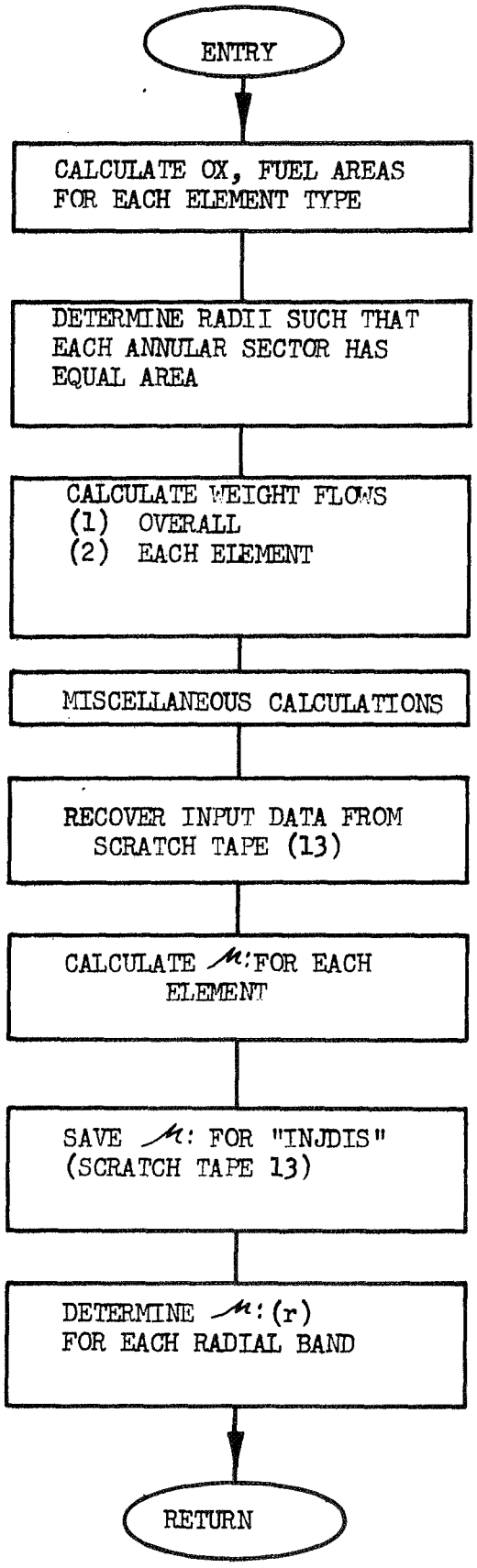

ENTRY = INJDIS
DECK = INJDS

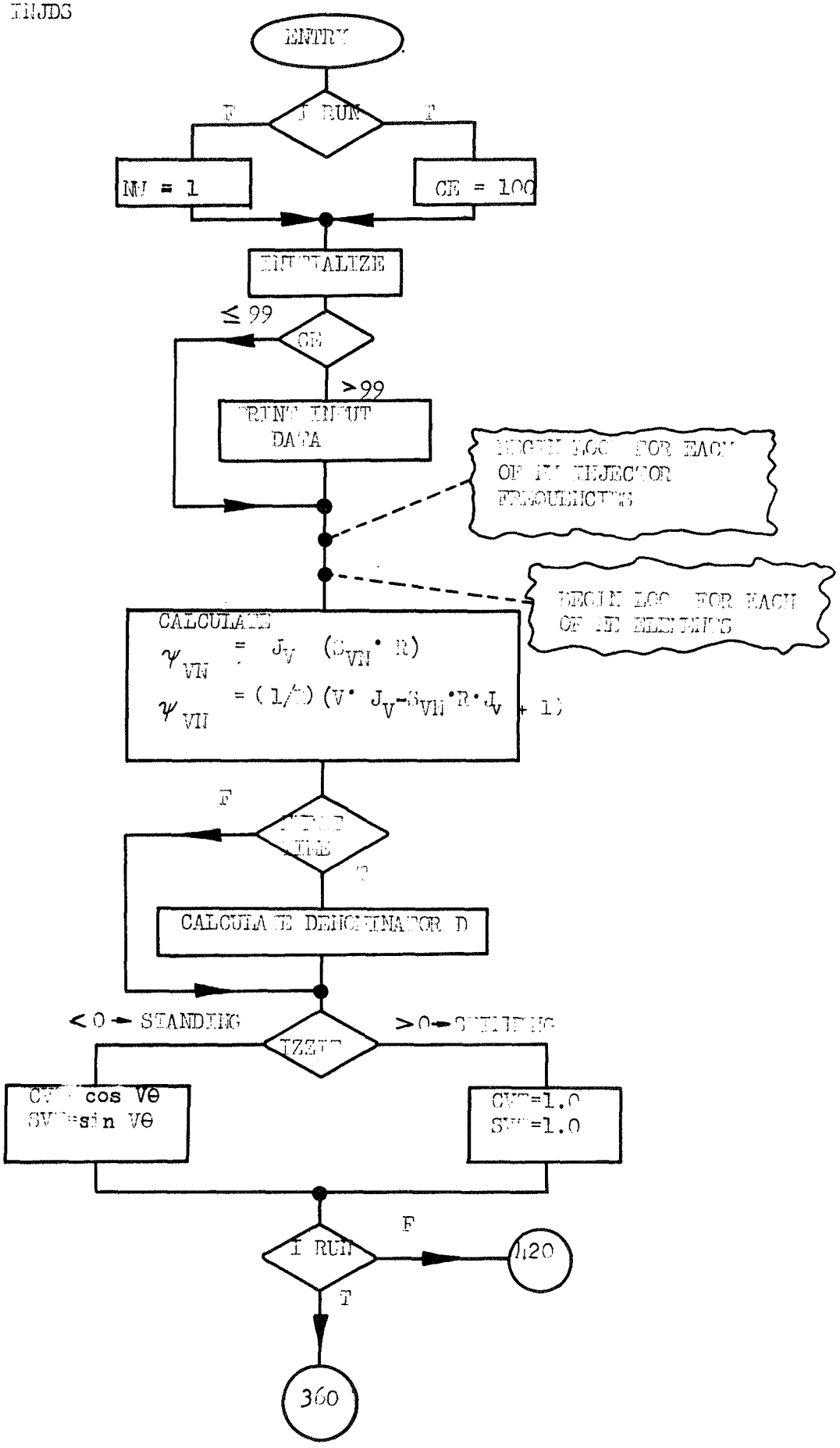

DECK = INJDS

2 of 2

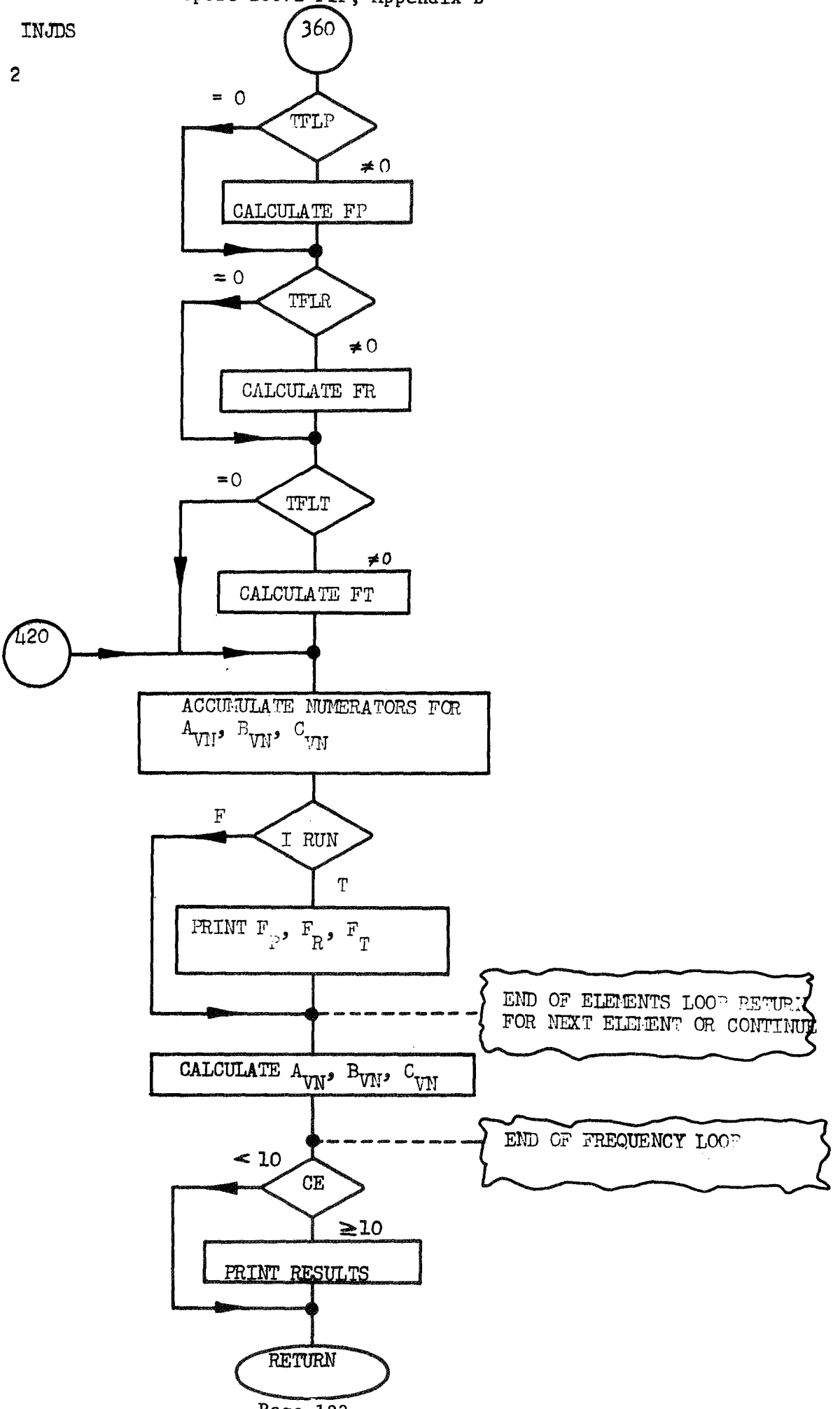

III. REFERENCES

1. Wieber, P. R., and Mickelsen, W., Effect of Transverse Acoustic Oscillations on the Vaporization of a Liquid-Fuel Droplet, NASA TN D-287, May 1960.

2. Reardon, F. H., An Investigation of Transverse Mode Combustion Instability in Liquid Propellant Rocket Motors, Princeton University Aeronautical Engineering Report No. 550, June 1961.

3. Crocco, L., and Sirignano, W. A., Behavior of Supercritical Nozzles Under Three Dimensional Oscillatory Conditions, to be published as an AGARDograph.

4. Culick, F. E. C., Stability of High Frequency Pressure Oscillations in Gas and Liquid Rocket Combustion Chambers, M. I. T. Aerophysics Laboratory Report No. 480, June 1961.

5. Crocco, L., and Cheng, S. I., Theory of Combustion Instability in Liquid Propellant Rocket Motors, AGARDograph No. 8, Butterworths Scientific Pub., Ltd., London, 1956.

6. Zinn, B. T., A Theoretical Study of Nonlinear Transverse Combustion Instability in Liquid Propellant Rocket Motors, Technical Report No. 732, Department of Aerospace and Mechanical Sciences, Princeton University, May 1966.

7. Scala, S. M., Transverse Wave and Entropy Wave Combustion Instability in Liquid Propellant Rockets, Princeton University Aeronautical Engineering Report No. 380, April 1957.

8. Crocco, L., "The Relevance of a Characteristic Time in Combustion Instability," Second ICRPG Combustion Conference, CPIA Publication No. 105, May 1966.

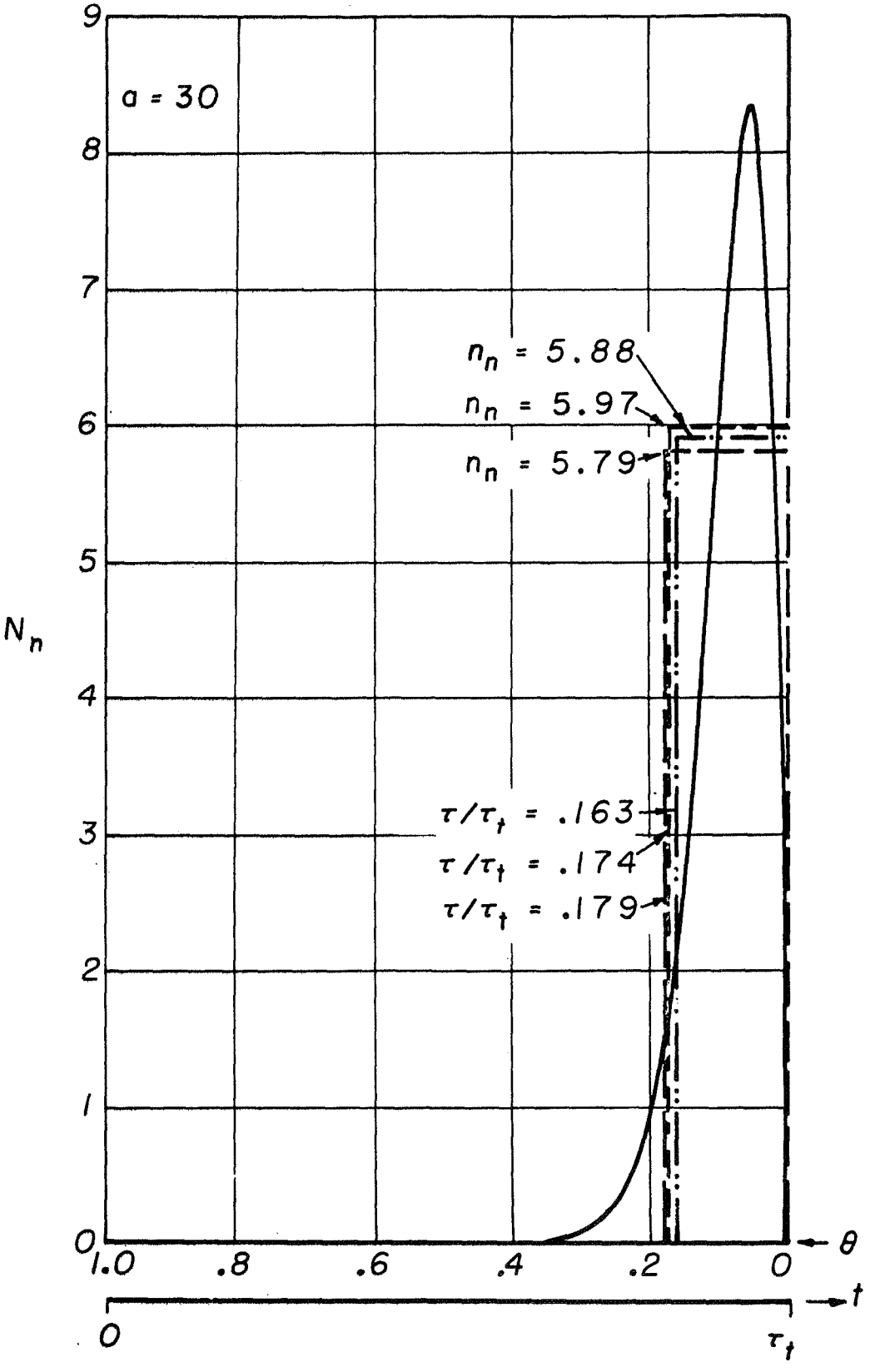

Figure 1. The General Interaction Index for Two Types of Combustion Sensitivities

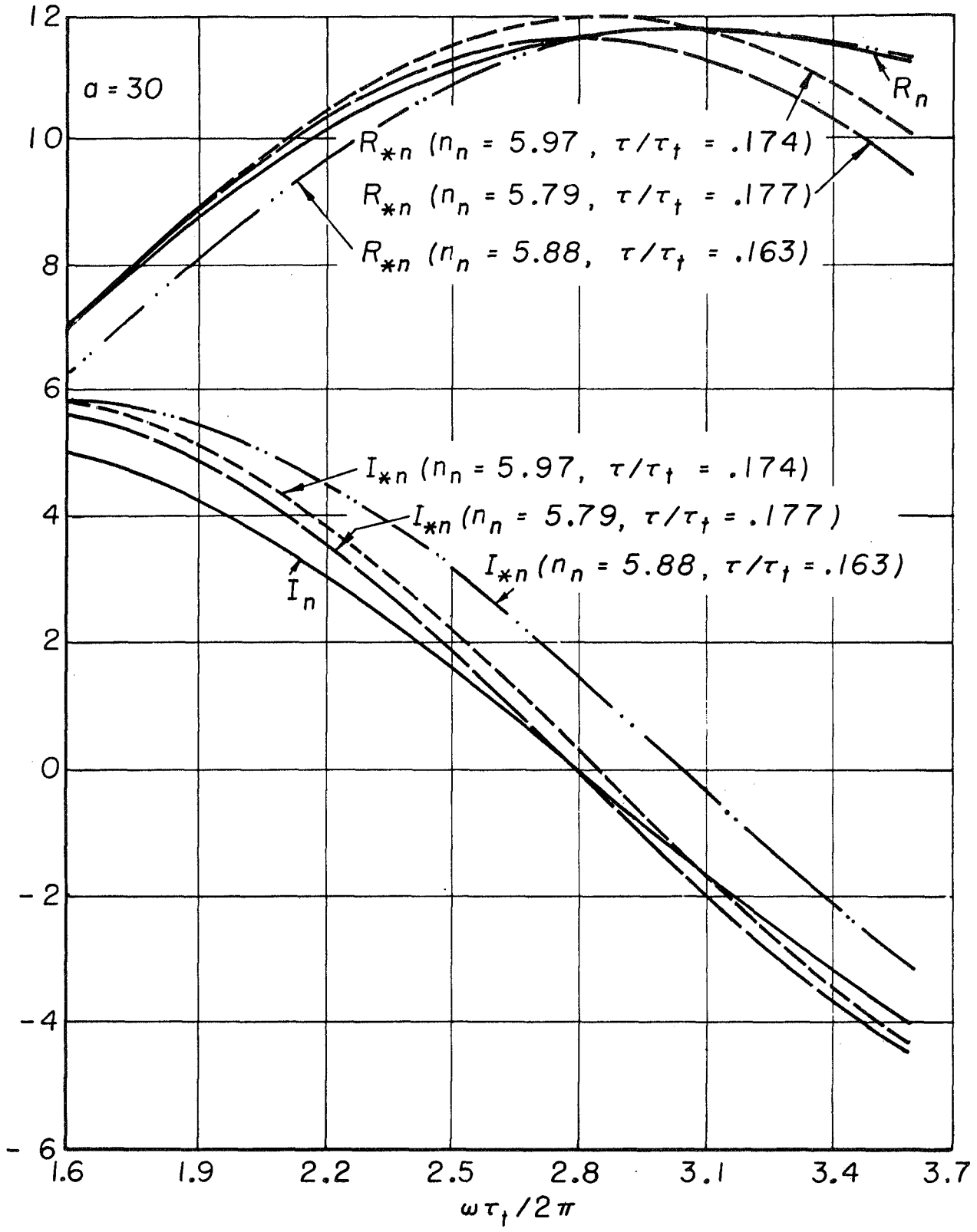

Figure 2. The Variation of the Feedback Factors R_n and I_n with Frequency

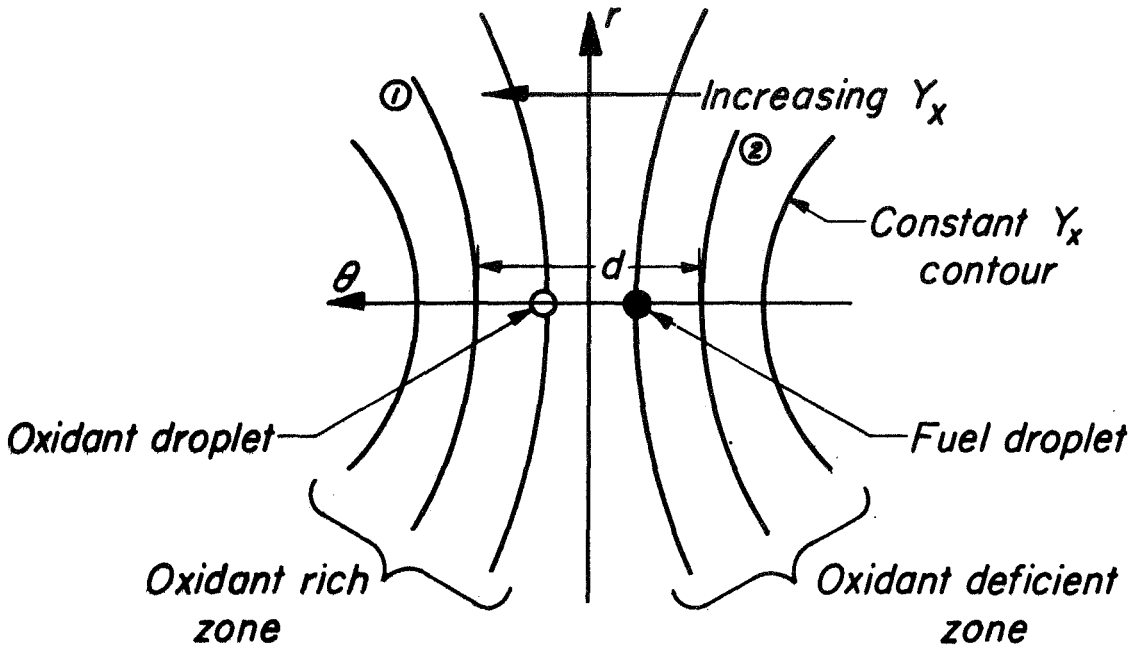

(a) Spray produced by tangentially oriented injector spud

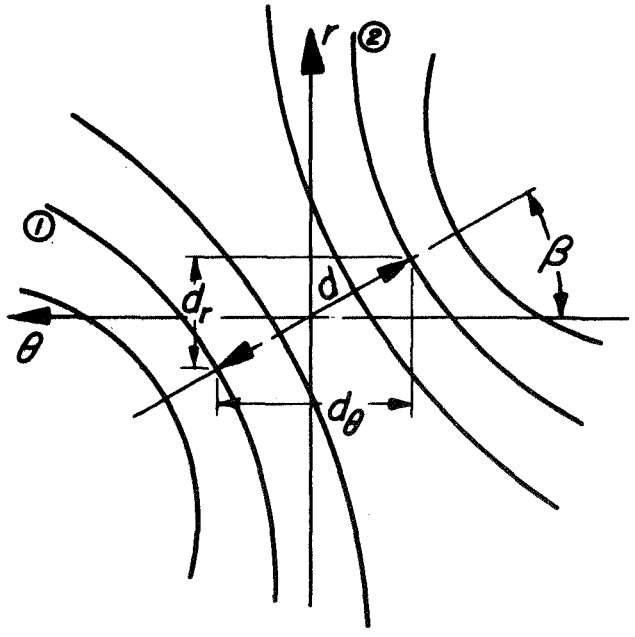

(b) Spray produced by rotated spud

Figure 3. Sprays Produced by Various Orientations of the Injector Spud

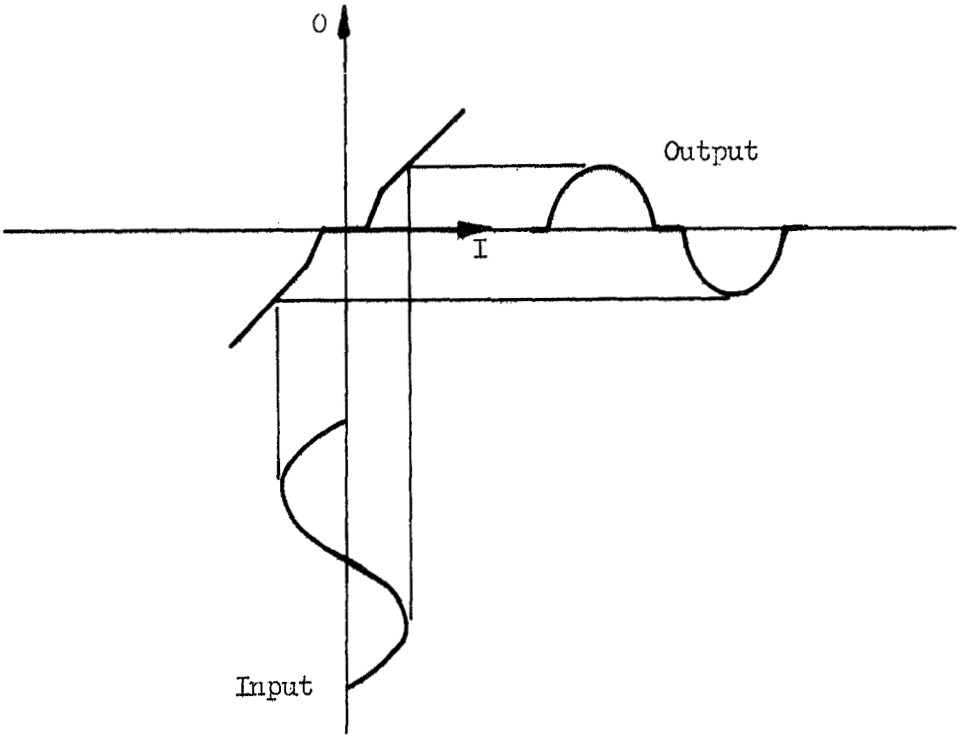

(a) Response Function with Odd-Symmetry

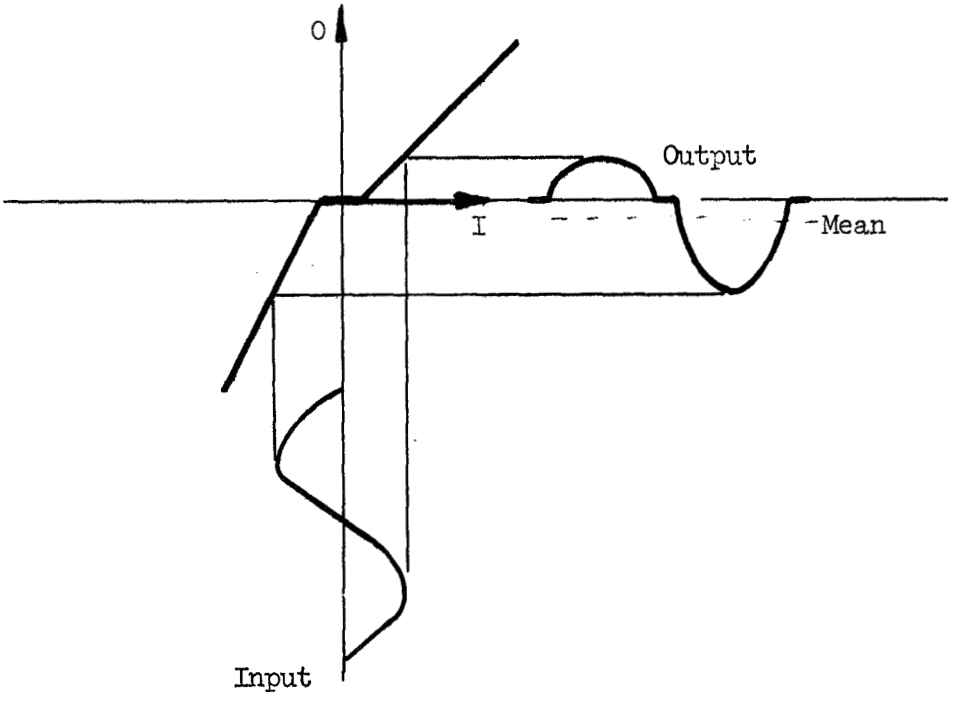

(b) Asymmetric Response Function

Figure 4. Examples of Nonlinear Response Functions

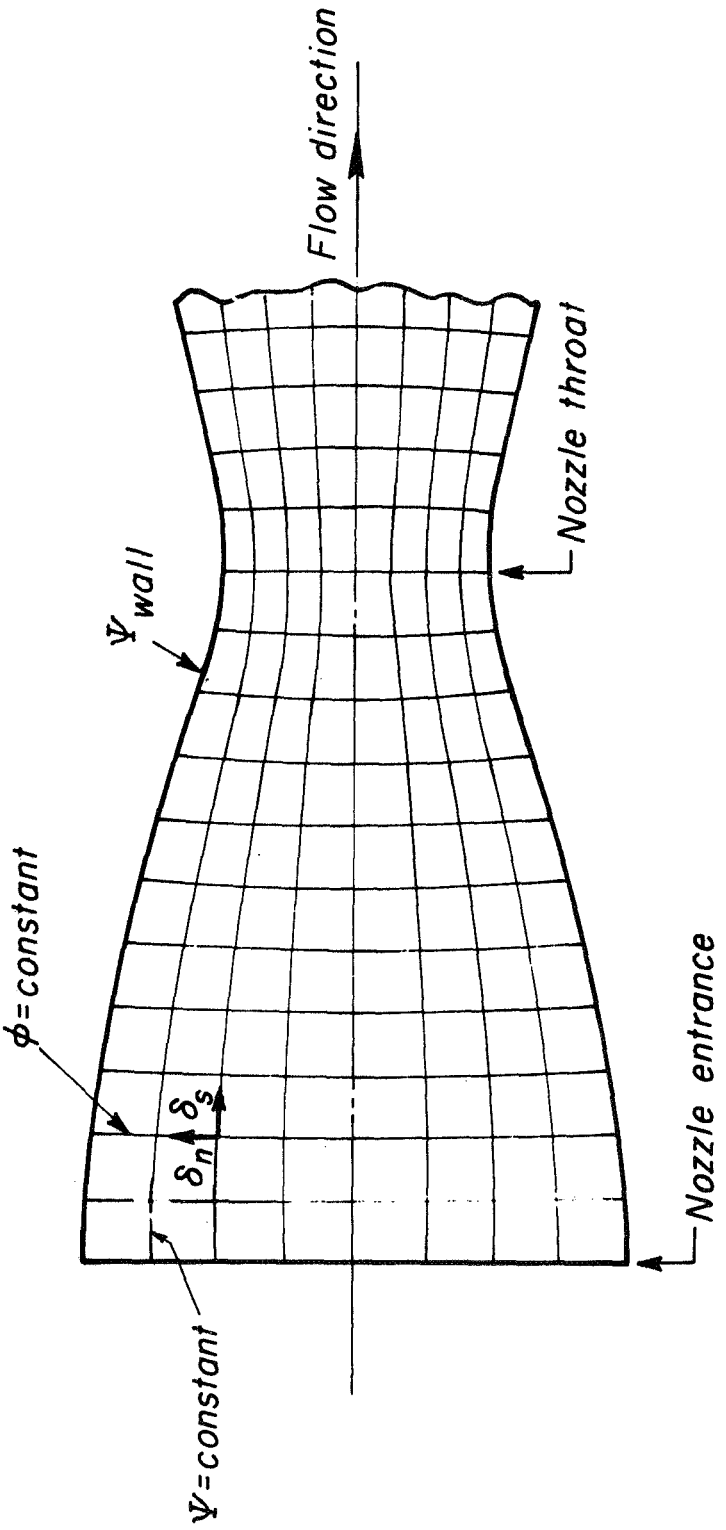

Figure 5. Exhaust Nozzle Coordinate System

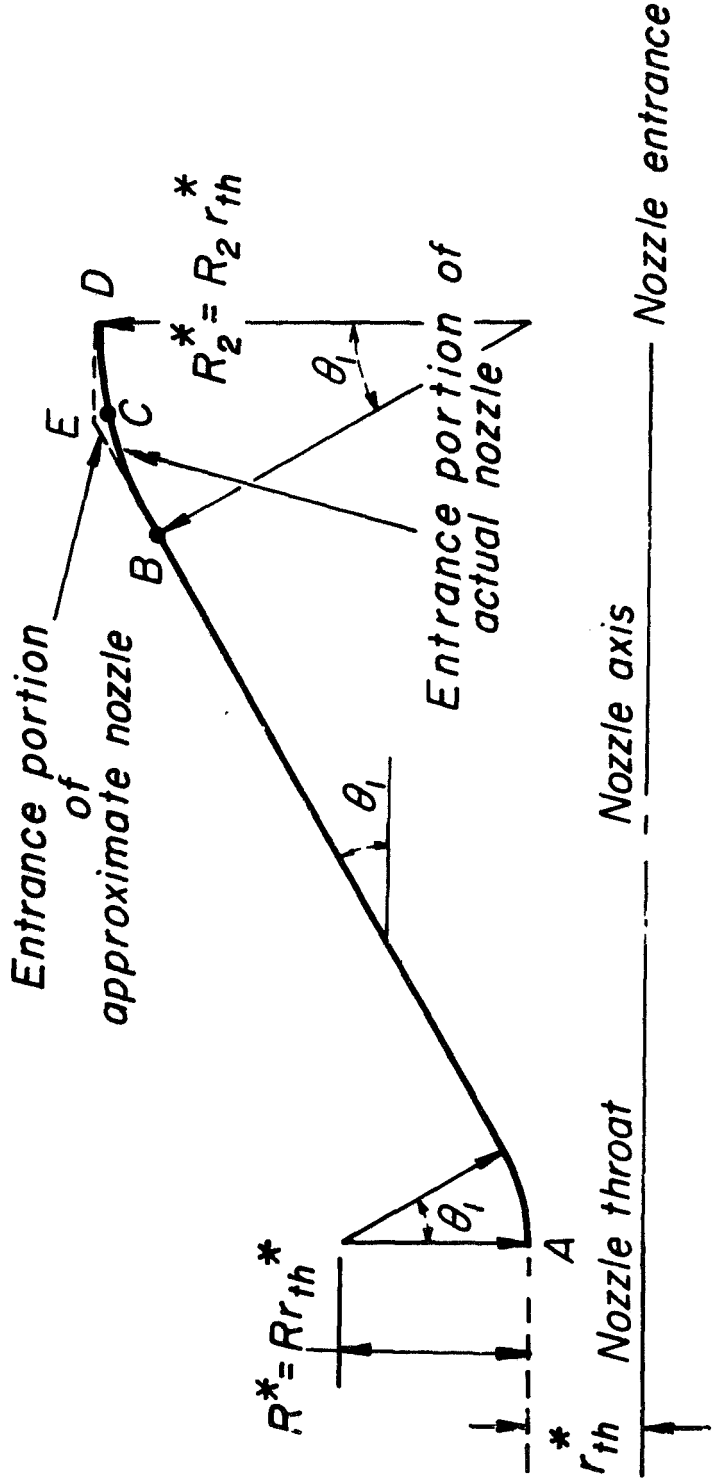

Figure 6. Nozzle Geometry and Comparison of Entrance Portions of Approximate And Actual Nozzle Geometries

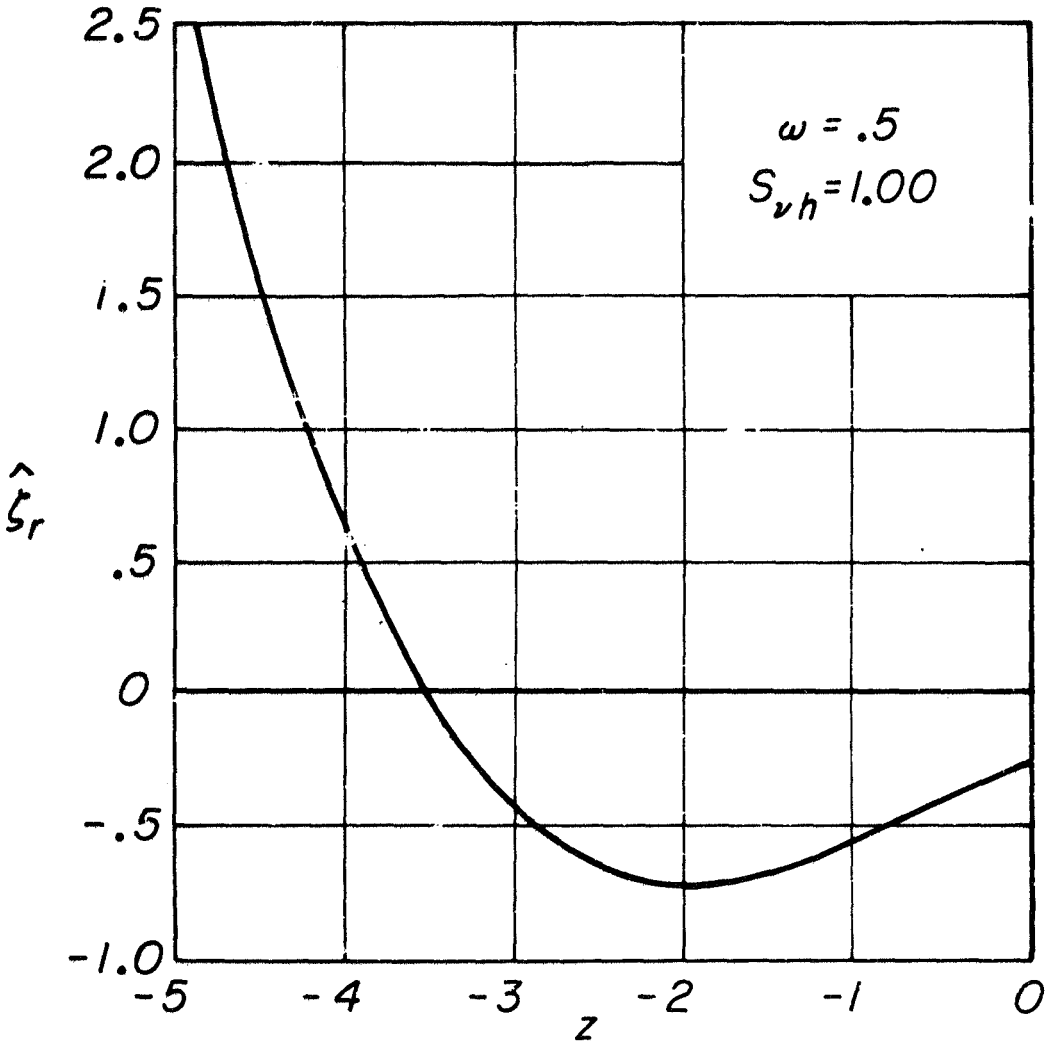

Figure 7. Real Part of ξ Versus Axial Distance

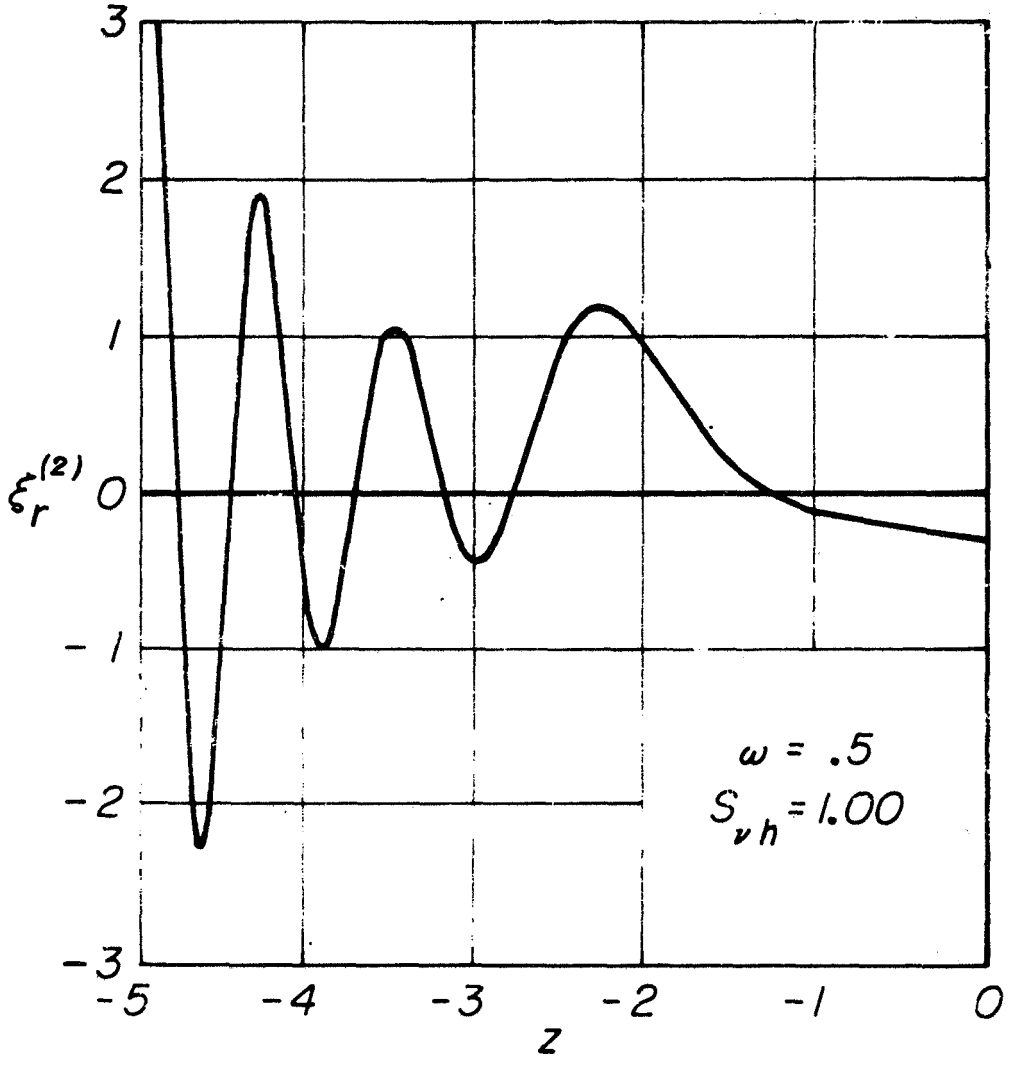

Figure 8. Real Part of $\xi^{(2)}$ Versus Axial Distance

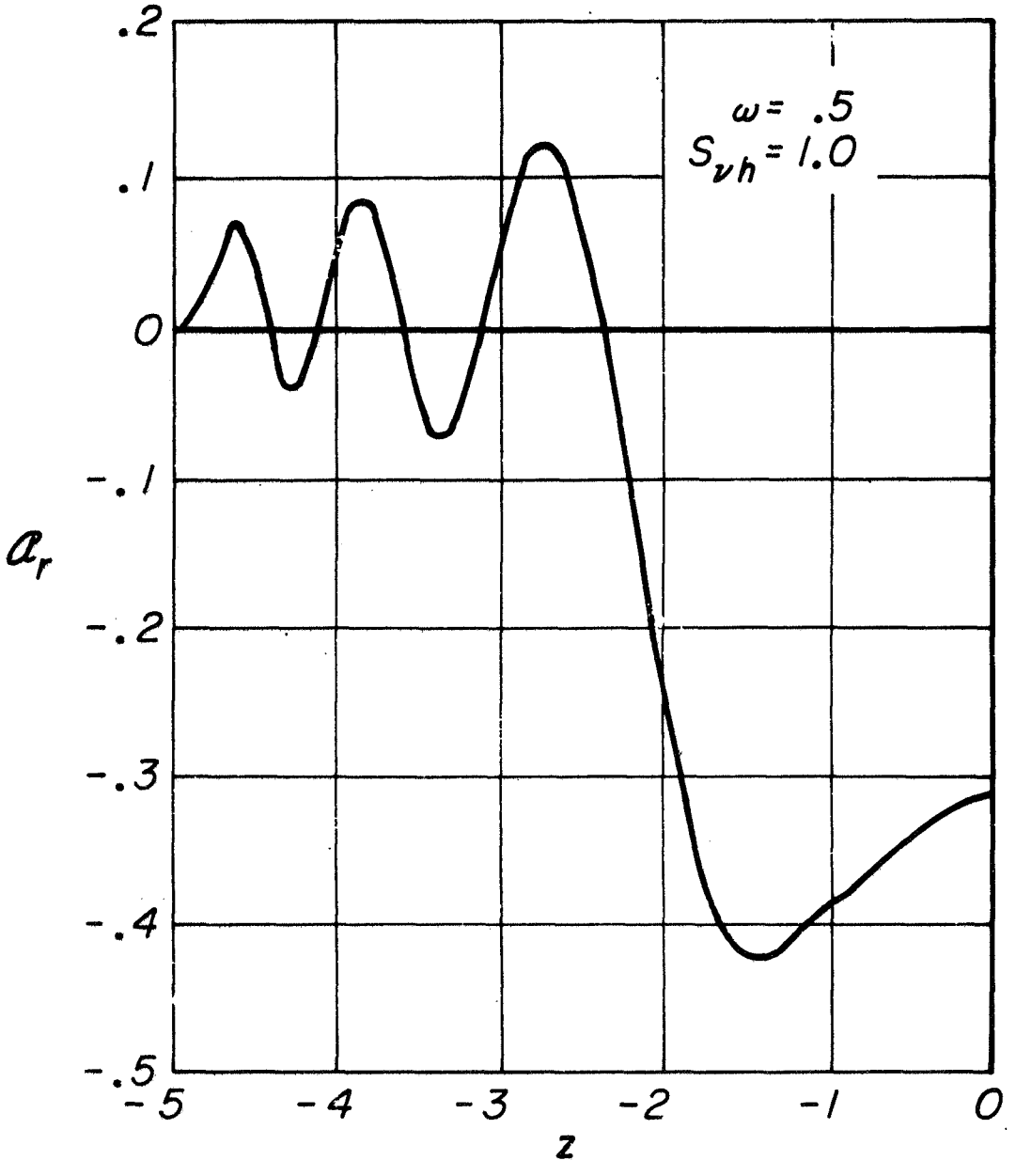

Figure 9. Real Part of Pressure Admittance Coefficient Versus Axial Distance

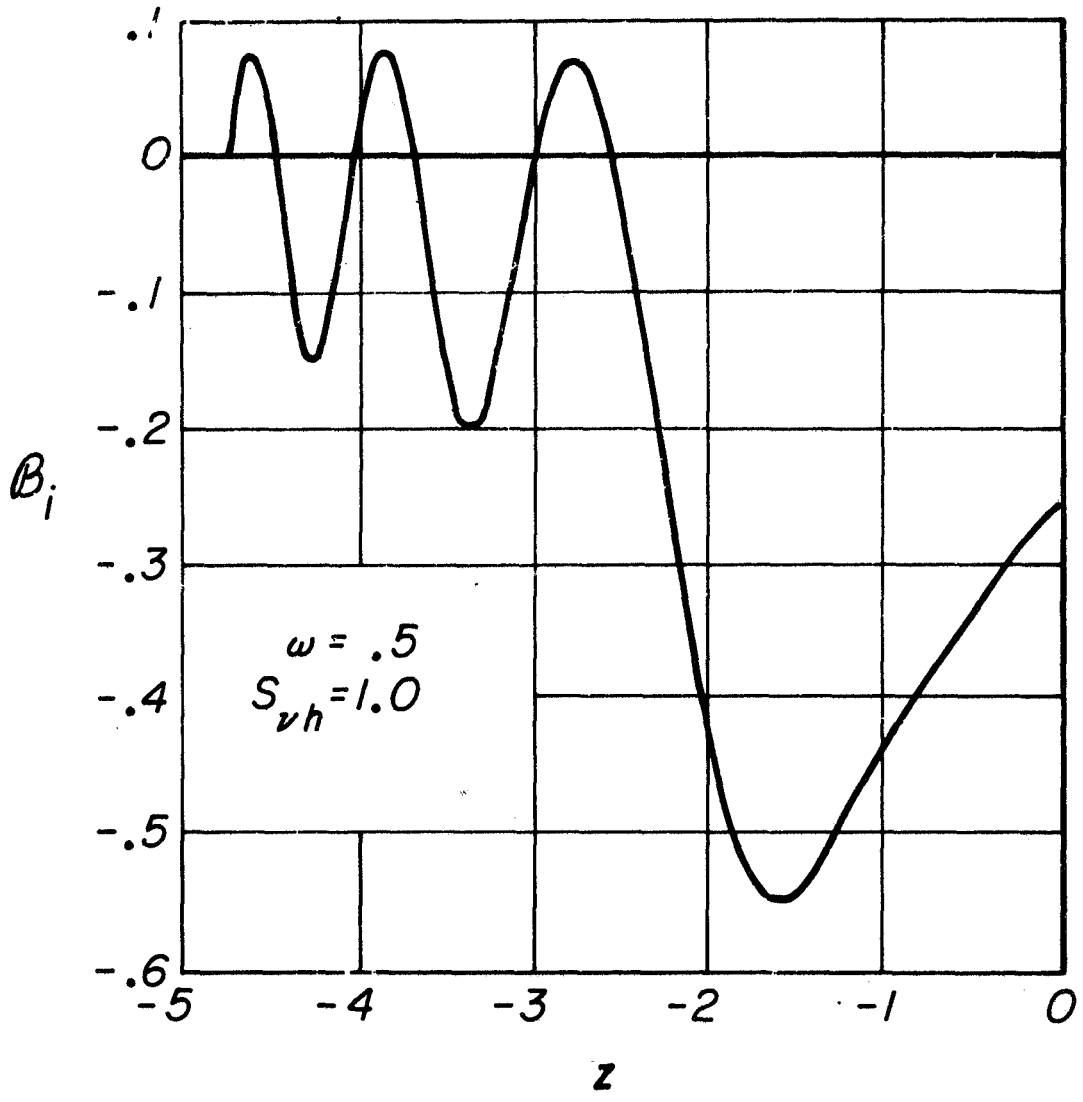

Figure 10. Imaginary Part of Radial Velocity Admittance Coefficient Versus Axial Distance

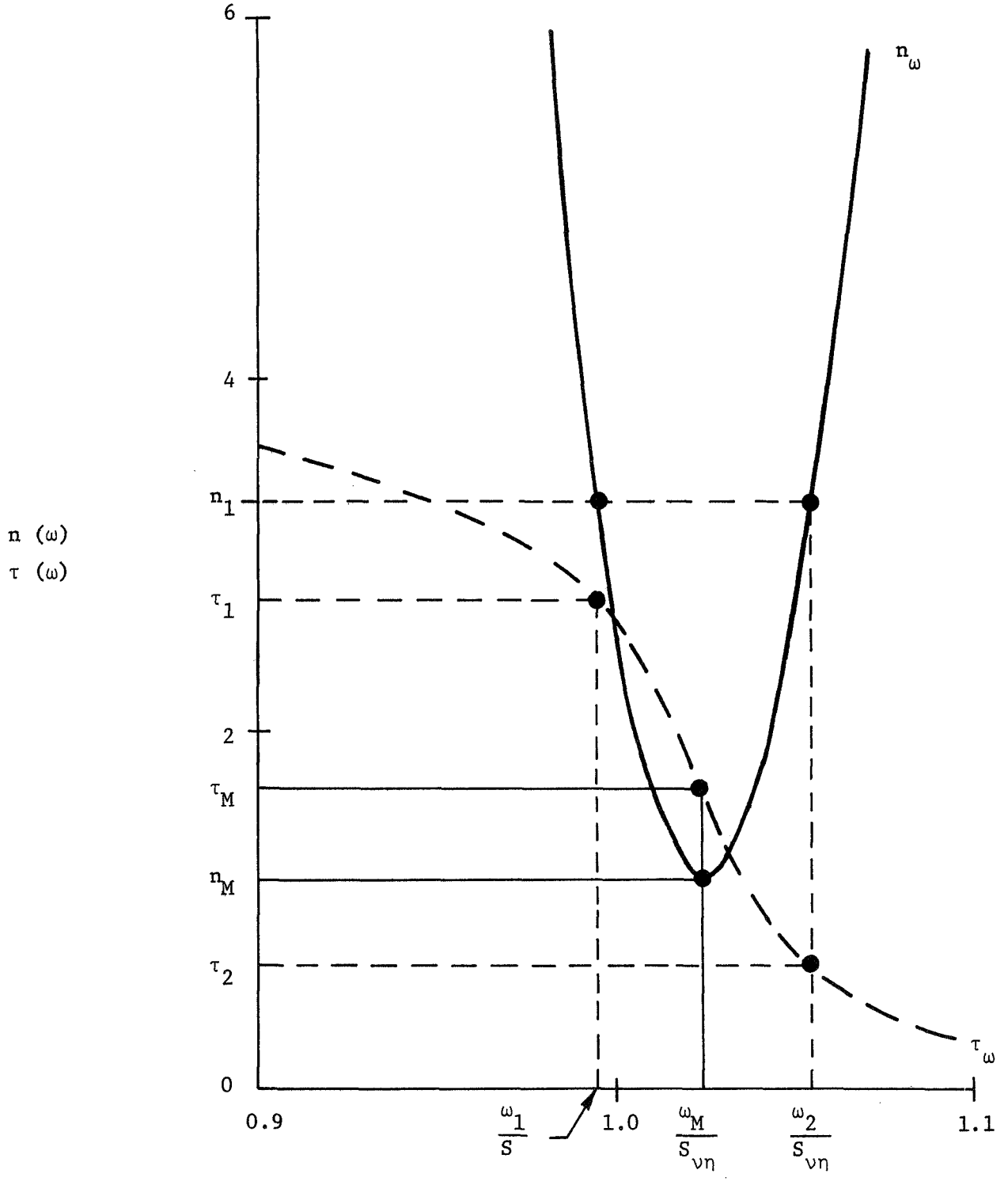

Figure 11. Typical Solutions of (ω) and τ(ω)

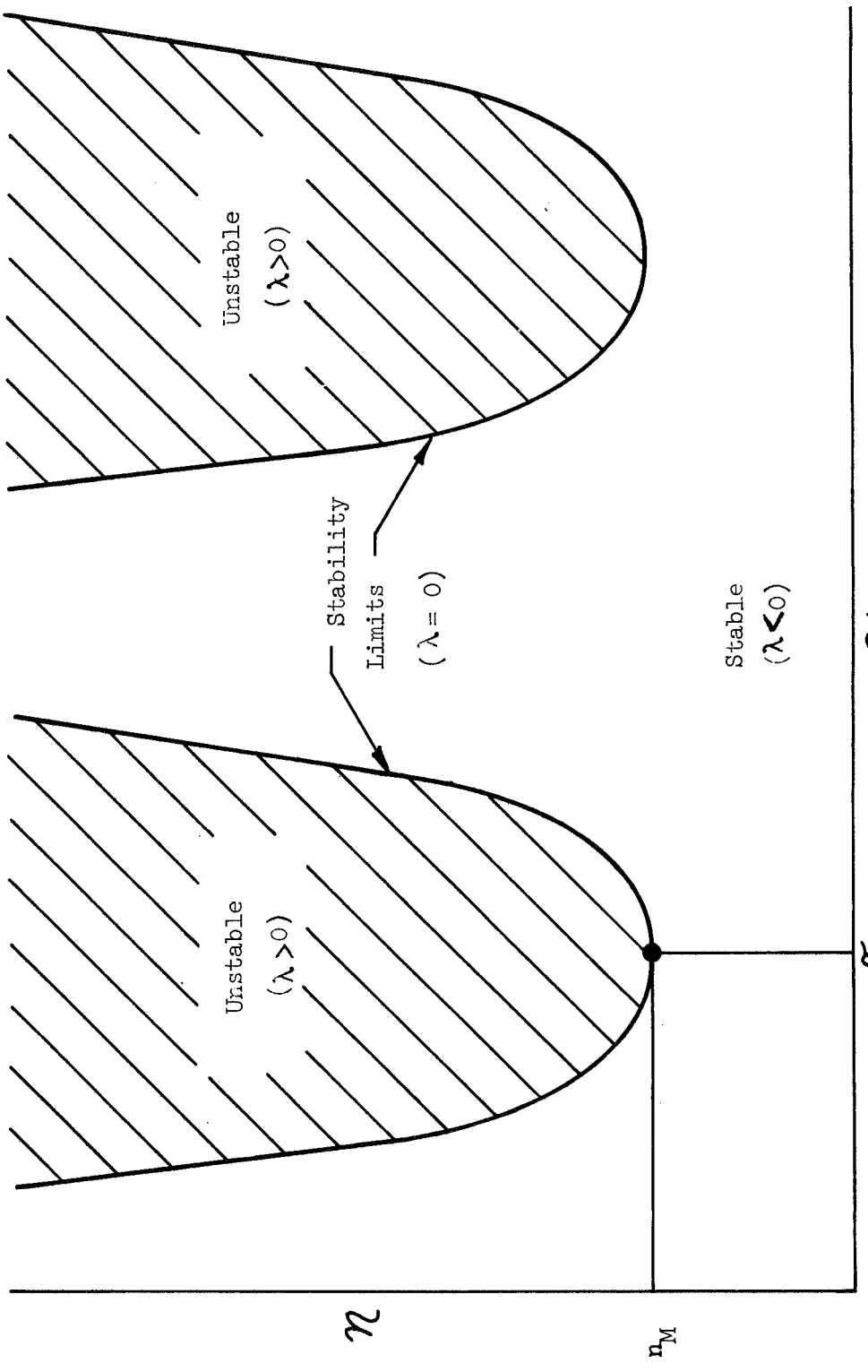

Figure 12. Stable and Unstable Regions on the η, τ-Plane

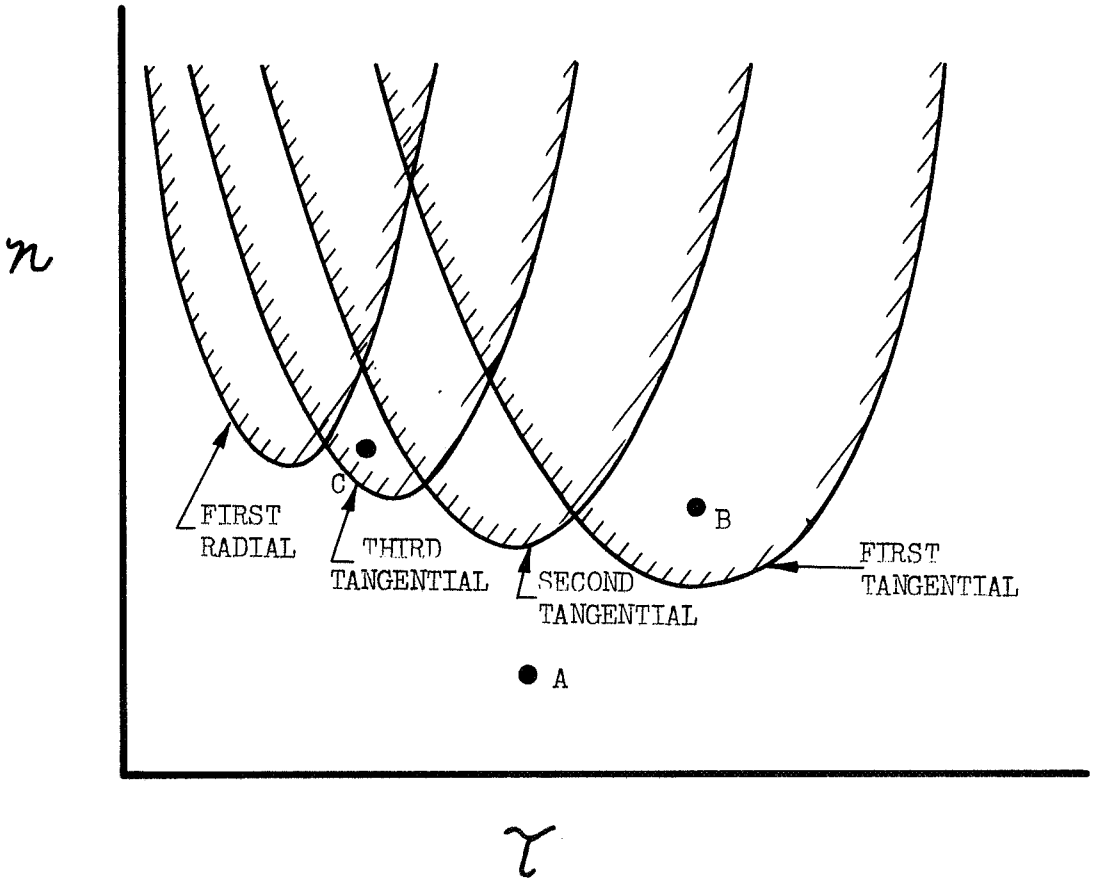

Figure 13. Relationship of Various Transverse Modes on the η, τ-Plane

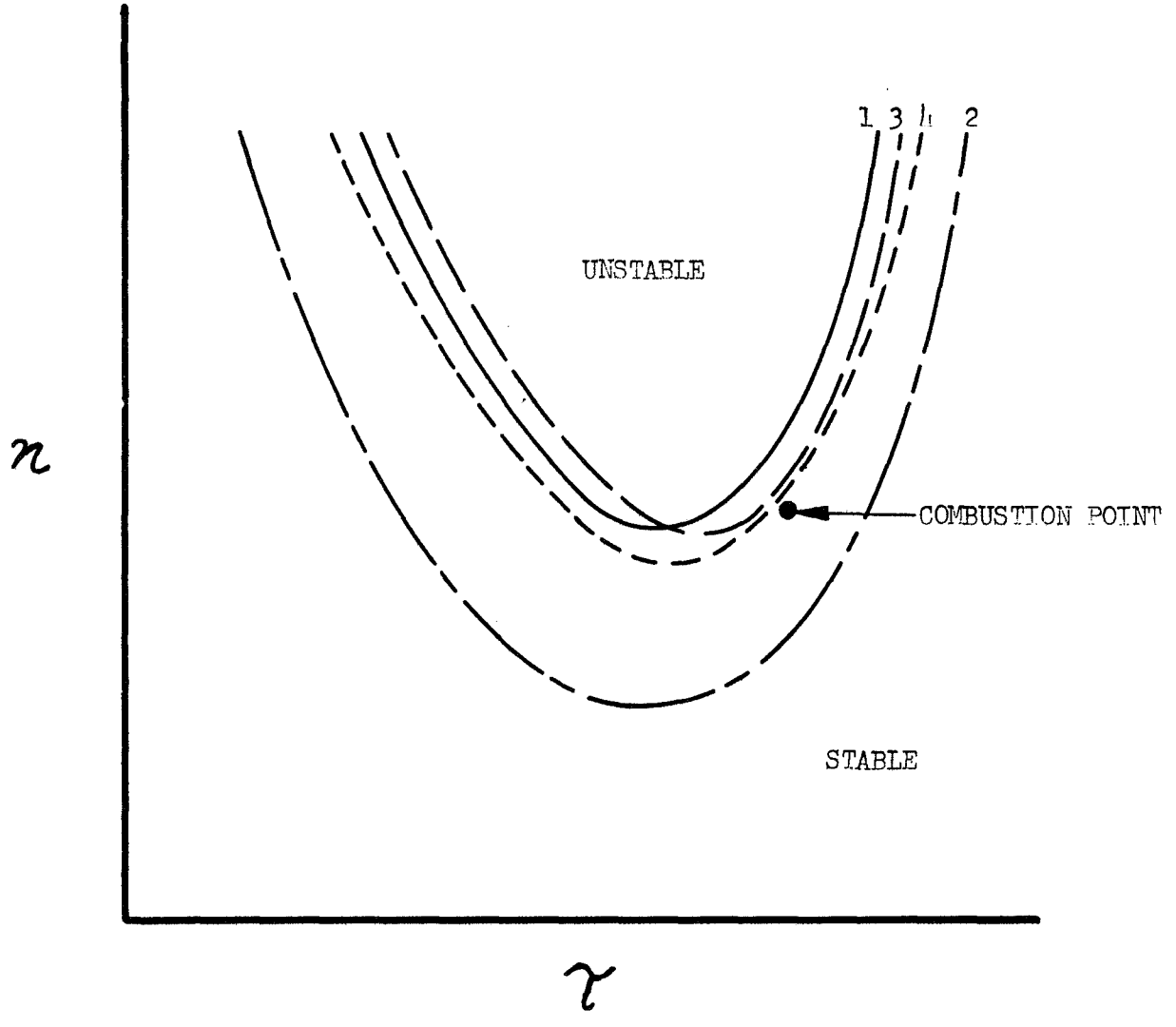

Figure 14. The Shift of the Stability Zone due to Nonlinear and Velocity Effects

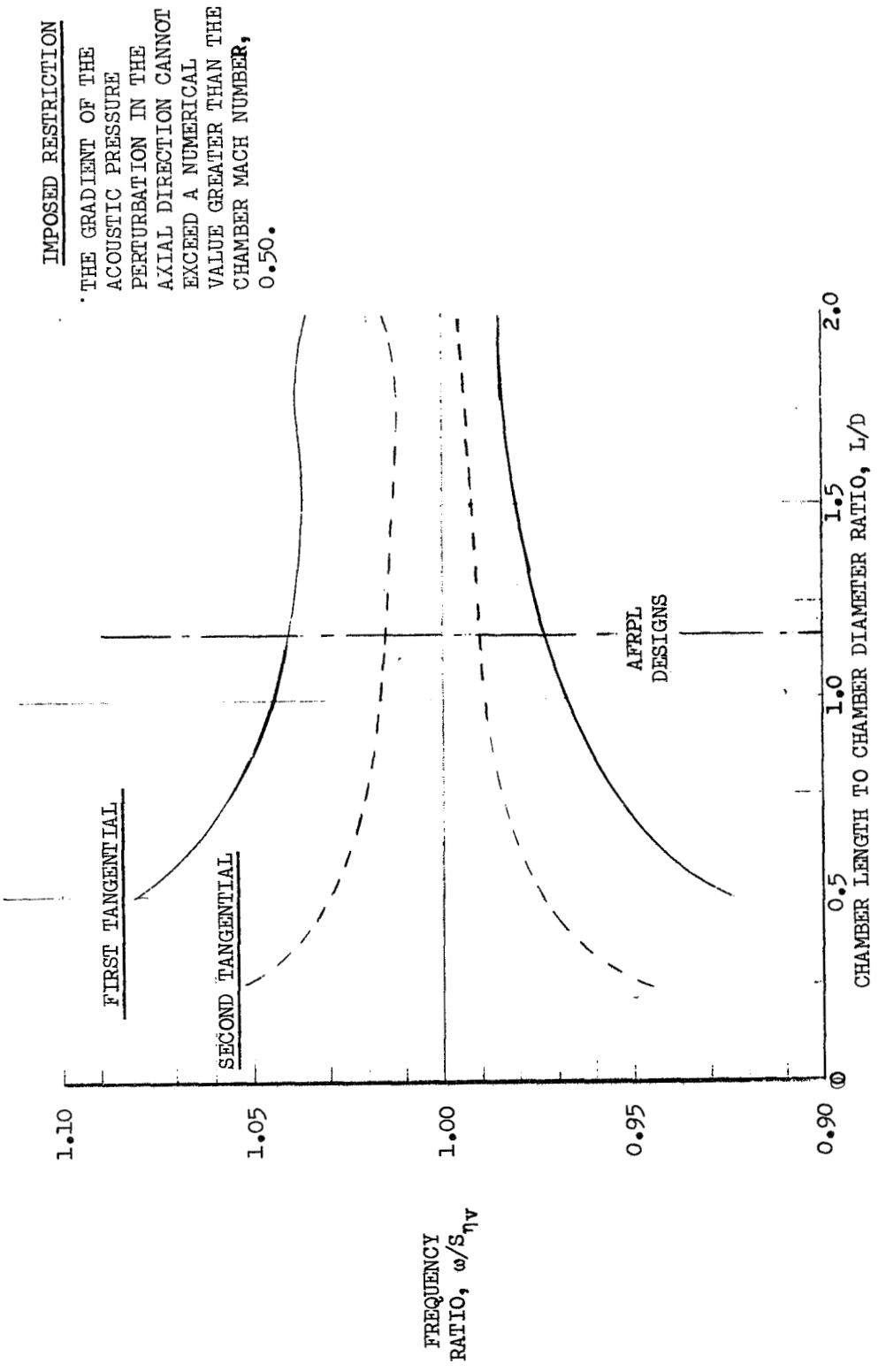

Figure 15. Applicable Frequency Ranges of Linear, Transverse Mode Sensitive Time Lag Model

DISTRIBUTION LIST

	Copies
NASA Headquarters Washington D.C., 20546 Attn: Chief, Liquid Propulsion Technology, RPL Office of Advanced Research and Technology	2
NASA Headquarters Washington D.C., 20546 Attn: Mr. A. O. Tischler, RP	1
NASA Headquarters Washington D.C., 20546 Attn: Mr. Vincent L. Johnson, Director Launch Vehicles and Propulsion, SV Office of Space Sciences and Applications	1
NASA Headquarters Washington D.C., 20546 Attn: Dr. A. Gessow	1
NASA Headquarters Washington D.C., 20546 Attn: Director Advanced Manned Missions, MT Office of Manned Space Flight	1
NASA Marshall Space Flight Center Huntsville, Alabama, 35812 Attn: Purchasing Office, PR-RC	1
NASA Marshall Space Flight Center Huntsville, Alabama, 35812 Attn: Scientific and Technical Information Branch, MS-IP	1
NASA Marshall Space Flight Center Huntsville, Alabama, 35812 Attn: Patent Office, CC-P	1
NASA Marshall Space Flight Center Huntsville, Alabama, 35812 Attn: Technology Utilization Office, MS-T	1
NASA Marshall Space Flight Center Huntsville, Alabama, 35812 Attn: Mr. Robert Richmond, R-P&VE-PAC	8

DISTRIBUTION LIST (cont.)

	Copies
NASA Marshall Space Flight Center Huntsville, Alabama, 35812 Attn: Mr. Rex Bailey, R-P&VE-PAC	1
NASA Marshall Space Flight Center Huntsville, Alabama, 35812 Attn: Mr. Keith Chandler, R-P&VE-PA	1
NASA Ames Research Center Moffett Field, California 94035 Attn: Technical Librarian for Dr. H. J. Allen, Director	1
Air Force Plant Representative Office Aerojet-General Corporation P.O. Box 2048 Sacramento, California 95809 Attn: Mr. D. F. Schafer	1
NASA Goddard Space Flight Center Greenbelt, Maryland 20771 Attn: Technical Librarian for Merland L. Moseson, Code 620	1
NASA Lewis Research Center 21000 Brookpark Road Cleveland, Ohio 44135 Attn: Dr. Richard Priem	1
NASA Lewis Research Center 21000 Brookpark Road Cleveland, Ohio 44135 Attn: Mr. E. W. Conrad	1
NASA Lewis Research Center 21000 Brookpark Road Cleveland, Ohio 44135 Attn: Mr. W. Tomazic	1
NASA Lewis Research Center 21000 Brookpark Road Cleveland, Ohio 44135 Attn: Technical Librarian for Dr. Abe Silverstein, Director	1

DISTRIBUTION LIST (cont.)

	Copies
NASA Jet Propulsion Laboratory California Institute of Technology 4800 Oak Grove Drive Pasadena, California 91103 Attn: Technical Librarian for Robert F. Rose, Propulsion Division, 38	1
NASA Jet Propulsion Laboratory California Institute of Technology 4800 Oak Grove Drive Pasadena, California 91103 Attn: Mr. Henry Burlage, Jr.	1
NASA Jet Propulsion Laboratory California Institute of Technology 4800 Oak Grove Drive Pasadena, California 91103 Attn: Mr. Jack H. Rupe	1
NASA Langley Research Center Langley Station Hampton, Virginia 23365 Attn: Technical Librarian for Floyd L. Thompson, Director	1
NASA Manned Spacecraft Center Houston, Texas 77001 Attn: Technical Librarian for Robert R. Gilruth, Director	1
NASA Manned Spacecraft Center Houston, Texas 77001 Attn: Mr. J. G. Thibodaux, EP	1
NASA John F. Kennedy Space Center Cocoa Beach, Florida 32931 Attn: Technical Librarian for Dr. Kurt H. Debus, Director	1
Scientific and Technical Information Facility P.O. Box 33 College Park, Maryland 20740	24
Advanced Research Projects Agency Washington 25, D.C. Attn: Technical Librarian for Dr. D. E. Mock	1

DISTRIBUTION LIST (cont.)

	Copies
Defense Documentation Center Headquarters Cameron Station, Bldg. 5 5010 Duke Street Alexandria, Virginia 22314 Attn: Technical Librarian for TISTA	1
Picatinny Arsenal Dover, New Jersey 07801 Attn: Technical Librarian for Mr. I. Forsten, Chief, Liquid Propulsion Laboratory, SMUPA-DL	1
Rocket Research Laboratories Edwards Air Force Base Edwards, California 93523 Attn: Technical Librarian	1
Rocket Research Laboratories Edwards Air Force Base Edwards, California 93523 Attn: Mr. Richard R. Weiss, RPRR	1
U. S. Army Missile Command Redstone Arsenal, Alabama 35809 Attn: Technical Librarian for Gen. Zierdt	1
U. S. Army Missile Command Redstone Arsenal, Alabama 35809 Attn: Dr. Walter W. Wharton, AMSMI-RRK	1
U. S. Naval Ordnance Test Station China Lake, California 93557 Attn: Technical Librarian for Chief, Missile Propulsion Division, Code 4562	1
Chemical Propulsion Information Agency Johns Hopkins University Applied Physics Laboratory 8621 Georgia Avenue Silver Spring, Maryland 20910 Attn: Technical Librarian for Mr. Neil Safeer	1

DISTRIBUTION LIST (cont.)

	Copies
Chemical Propulsion Information Agency Johns Hopkins University Applied Physics Laboratory 8621 Georgia Avenue Silver Spring, Maryland 20910 Attn: Mr. T. W. Christian	1
ARL Wright-Patterson AFB Dayton, Ohio 45433 Attn: Mr. K. Scheller, Bldg. 450	1
Air Force Systems Division Air Force Unit Post Office Los Angeles 45, California Attn: Col. Clark, Technical Data Center	1
Arnold Engineering Development Center Arnold Air Force Station Tullahoma, Tennessee Attn: Dr. H. K. Doetsch	1
Bureau of Naval Weapons Department of the Navy Washington, D.C. Attn: Mr. J. Kay, RTMS-41	1
Headquarters Air Force Office of Scientific Research Propulsion Division Washington, D.C. Attn: Dr. Bernard T. Wolfson	1
Department of the Navy Office of Naval Research Washington, D.C. 20360 Attn: Mr. R. O. Jackel	1
RTNT Bolling Field Washington, D.C. 20332 Attn: Dr. L. Green, Jr.	1

DISTRIBUTION LIST (cont.)

	Copies
Aerojet-General Corporation P.O. Box 15847 Sacramento, California 95809 Attn: Technical Librarian for Mr. R. Stiff	1
Aerojet-General Corporation P.O. Box 15847 Sacramento, California 95809 Attn: Mr. J. M. Mc Bride	1
Sacramento State College Engineering Division 600 J Street Sacramento, California 95819 Attn: Dr. Fred H. Reardon	1
Aerospace Corporation P.O. Box 95085 Los Angeles, California 90045 Attn: Technical Librarian for Mr. J. C. Wilder	1
Aerospace Corporation P.O. Box 95085 Los Angeles, California 90045 Attn: Mr. O. W. Dykema	1
Aerospace Corporation P.O. Box 95085 Los Angeles, California 90045 Attn: Dr. W. G. Strahle	1
Aeronautronic Philco Corporation Ford Road Newport Beach, California 92663 Attn: Technical Librarian for Mr. D. A. Carrison	1
Astropower Laboratory Douglas Aircraft Company 2121 Paularino Newport Beach, California 92663 Attn: Technical Librarian for Dr. George Moc	1

DISTRIBUTION LIST (cont.)

	Copies
Astrosystems International, Inc. 1275 Bloomfield Avenue Fairfield, New Jersey 07007 Attn: Technical Librarian for Mr. A. Mendenhall	1
Atlantic Research Corporation Edsall Road and Shirley Highway Alexandria, Virginia 22314 Attn: Technical Librarian for Mr. A. Scurlock	1
Arther D. Little, Inc. Acorn Park Cambridge, Massachusetts 02140 Attn: Technical Librarian for Dr. E. K. Bastress	1
Bell Aerosystems Company P.O. Box 1 Buffalo 5, New York Attn: Technical Librarian for Mr. W. M. Smith	1
Boeing Company P.O. Box 3707 Seattle, Washington 98124 Attn: Technical Librarian for Mr. J. D. Alexander	1
Curtiss-Wright Corporation Wright Aeronautical Division Wood-Ridge, New Jersey 07075 Attn: Technical Librarian for Mr. G. Kelly	1
General Electric Company Cincinnati, Ohio 45215 Attn: Technical Librarian for Mr. D. Suichu	1
Lockheed Missiles and Space Company Technical Information Center P.O. Box 504 Sunnyvale, California 94088 Attn: Technical Librarian for Dr. Y. C. Lee	1
The Marquardt Corporation 16555 Saticoy Street Van Nuys, California 91409 Attn: Technical Librarian for Mr. Warren P. Boardman, Jr.	1

DISTRIBUTION LIST (cont.)

	Copies
North American Aviation, Inc. Space and Information Systems Division 12214 Lakewood Boulevard Downey, California Attn: Technical Librarian for Mr. Bergen	1
Reaction Motors Division Thiokol Chemical Corporation Denville, New Jersey 07832 Attn: Technical Librarian for Mr. Arthur Sherman	1
Reaction Motors Division Thiokol Chemical Corporation Denville, New Jersey 07832 Attn: Technical Librarian for Mr. O. Mann	1
Space Technology Laboratories TRW Incorporated One Space Park Redondo Beach, California 90278 Attn: Mr. G. W. Elverum	1
Stanford Research Institute 333 Ravenswood Avenue Menlo Park, California 94025 Attn: Technical Librarian for Mr. Lionel Dickinson	1
TAPCO Division TRW, Incorporated 23555 Euclid Avenue Cleveland, Ohio 44117 Attn: Technical Librarian for Mr. P. T. Angell	1
Thiokol Chemical Corporation Redstone Division Huntsville, Alabama Attn: Technical Librarian for Mr. John Goodloe	1
United Aircraft Corporation Research Laboratories 400 Main Street East Hartford, Connecticut 06108 Attn: Technical Librarian for Mr. Erle Martin	1

DISTRIBUTION LIST (cont.)

	Copies
United Aircraft Corporation Research Laboratories 400 Main Street East Hartford, Connecticut 06108 Attn: Mr. D. H. Utvik	1
United Aircraft Corporation Research Laboratories 400 Main Street East Hartford, Connecticut 06108 Attn: Mr. R. H. Osborn	1
United Technology Center 587 Mathilda Avenue P.O. Box 358 Sunnyvale, California 94088 Attn: Technical Librarian for Mr. B. Adelman	1
Rocketdyne Division of North American Aviation 6633 Canoga Avenue Canoga Park, California 91304 Attn: Technical Librarian for Mr. S. Hoffman	1
Rocketdyne Division of North American Aviation 6633 Canoga Avenue Canoga Park, California 91304 Attn: Dr. Robert B. Lawhead	1
Rocketdyne Division of North American Aviation 6633 Canoga Avenue Canoga Park, California 91304 Attn: Mr. Robert Fontaine	1
Warner-Swasey Company Control Instrument Division 32-16 Downing Street Flushing, New York 11354 Attn: Mr. R. H. Tourin	1
Pratt and Whitney Aircraft P.O. Box 2691 West Palm Beach, Florida 33402 Attn: Technical Librarian for Mr. R. J. Coar	1

DISTRIBUTION LIST (cont.)

	Copies
Pratt and Whitney Aircraft P.O. Box 2691 West Palm Beach, Florida 33402 Attn: Mr. George Lewis	1
Rocket Research Corporation 520 South Portland Street Seattle, Washington 98108 Attn: Technical Librarian for Mr. Foy McCullough, Jr.	1
Defense Research Corporation P.O. Box 3587 Santa Barbara, California Attn: Mr. B. Gray	1
Multi-Tech Inc. Box 4186 No. Annex San Fernando, California Attn: Mr. F. B. Cramer	1
Geophysics Corporation of America Technical Division Burlington Road Bedford, Massachusetts 01730 Attn: Mr. A. C. Tobey	1
Polytechnic Institute of Brooklyn Graduate Center Route 110 Farmingdale, New York Attn: Dr. V. D. Agosta	1
Applied Physics Laboratory The Johns Hopkins University 8621 Georgia Avenue Silver Spring, Maryland 20910 Attn: Dr. W. G. Berl	1
Ohio State University Rocket Research Laboratory Department of Aeronautical and Astronautical Engineering Columbus, Ohio 43201 Attn: Dr. R. Edse	1

DISTRIBUTION LIST (cont.)

	Copies
Princeton University Forrestal Research Center Princeton, New Jersey Attn: Dr. I. Glassman	1
Princeton University Forrestal Research Center Princeton, New Jersey 08540 Attn: Mr. D. T. Harrje	1
University of Wisconsin Dept. Mechanical Engineering 1513 University Avenue Madison, Wisconsin 53705 Attn: Dr. P. S. Myers	1
Dartmouth University Hanover, New Hampshire Attn: Dr. P. D. McCormack	1
University of Michigan Aeronautical and Astronautical Engineering Laboratories Aircraft Propulsion Laboratory North Campus Ann Arbor, Michigan Attn: Dr. J. A. Nicholls	1
Institute of Engineering Research University of California Berkeley, California Attn: Dr. A. K. Oppenheim	1
Purdue University School of Mechanical Engineering Lafayette, Indiana Attn: Dr. J. R. Osborn	1
Massachusetts Institute of Technology Department of Mechanical Engineering Cambridge 39, Massachusetts Attn: Dr. T. Y. Toong	1

DISTRIBUTION LIST (cont.)

	Copies
Illinois Institute of Technology 10 W. 35th Street Chicago, Illinois Attn: Dr. P. T. Torda	1
The Pennsylvania State University Mechanical Engineering Department 207 Mechanical Engineering Blvd. University Park, Pennsylvania 16802 Attn: G. M. Faeth	1
Georgia Institute of Technology Aerospace School Atlanta, Georgia 30332 Attn: Dr. B. T. Zinn	1

AEROJET
GENERAL TIRE
GENERAL

AEROJET-GENERAL CORPORATION

See N70-25301
N70-25301
DRF

A Reproduced Copy

OF

Reproduced for NASA

by the

NASA Scientific and Technical Information Facility

PROPULSION DIVISION

OCT 1970
RECEIVED
NASA STI FACILITY
INPUT BRANCH

STABILITY CHARACTERIZATION OF ADVANCED INJECTORS

Summary Final Report on Phase I of
Contract NAS 8-20672

Prepared for

MARSHALL SPACE FLIGHT CENTER
Huntsville, Alabama

Report 20672-PISF 25 October 1962

LIBRARY COPY

NOV 1 8 1962

MANNED SPACE FLIGHT CENTER
HOUSTON, TEXAS

AEROJET GENERAL TIRE GENERAL ®

AEROJET-GENERAL CORPORATION

SACRAMENTO, CALIFORNIA

AEROJET GENERAL TIRE GENERAL

STABILITY CHARACTERIZATION OF ADVANCED INJECTORS

Summary Final Report on Phase I of
Contract NAS 8-20672

Prepared for

MARSHALL SPACE FLIGHT CENTER
Huntsville, Alabama

Report 20672-PISF 25 October 1968

Approved

J. M. McBride
Project Manager

C. B. McGough
Program Manager

AEROJET-GENERAL CORPORATION
A SUBSIDIARY OF THE GENERAL TIRE & RUBBER COMPANY

TABLE OF CONTENTS

		Page
I.	Introduction	1
II.	Summary	2
III.	Task I: Analytical Model Development	4
	A. Annular Combustor Analysis	4
	B. Staged Combustion Model	5
IV.	Task II: Annular Thrust Chamber Assembly Tests	7
V.	Task III: Transverse Excitation Chamber Testing	10
VI.	Conclusions	12

TABLE LIST

	Table
Steady State and Stability Test Results	1

FIGURE LIST

	Figure
Tangential Mode Acoustic Frequencies for Annular Chambers	1
Annular Coaxial Injector	2
Annular Thrust Chamber Assembly on Test Stand C-6	3
Transverse Excitation Chamber Assembly Schematic	4
Transverse Excitation Chamber Triplet Injector Hydroflow Pattern	5

I. INTRODUCTION

The purpose of Phase I of this program was to determine the stability characteristics of various injectors using high combustion chamber pressures with the cryogenic propellants, hydrogen and oxygen. Coaxial injectors for the most part were characterized under previous programs at Aerojet, NASA, and other government subcontractors. The remaining design feature to be evaluated on the coaxial injector was the effect of injection density on combustion stability. This effect was evaluated during the test portion of this program in an annular combustion chamber.

Combustion stability correlations based on Sensitive Time Lag Theory require an accurate definition of theoretical considerations. Consequently, part of the investigation necessary to advance current knowledge in combustion stability was the advancement of Sensitive Time Lag Theory. A refinement to the basic theory was the addition of terms to account for higher combustion chamber Mach numbers and an extension of the current model to include the toroidal or annular combustors.

As part of the experimental program an experimental tool, the "Transverse Excitation Chamber," was designed and the feasibility of using this tool to measure the frequency sensitivity of a particular injector demonstrated.

Many preliminary designs were evaluated prior to the selection of the designs fabricated and tested on this program.

Phase I was scheduled for 12 months of technical effort, but was extended to 15 months to include additional hardware fabrication.

II. SUMMARY

The stability characteristics of two injection concepts to be used in advanced injectors for high chamber pressure, hydrogen/oxygen systems were determined on this phase of the program. The two injection concepts tested were: coaxial with central oxidizer and 30° included angle fuel impingement; and triplet injectors with 60° included angle oxidizer-fuel-oxidizer pattern. Analytical model developments were advanced for the Sensitive Time Lag Theory, and a research tool termed "Transverse Excitation Chamber" was demonstrated.

Analytical model developments included expansion and refinement of the existing Sensitive Time Lag model to include annular combustion chambers and initiation of analyses to include feed system coupled pressure oscillations as encountered with the staged combustion system.

The second major task consisted of testing injector patterns in an annular thrust chamber. Injectors designed and fabricated for this task included one coaxial and two versions of one basic triplet element pattern. The coaxial injector was patterned after an injector tested on Contract NAS 8-11741, except that the injection density (total propellant flow rate per projected injector face area) was nearly doubled. The triplet injectors were patterned after a design being considered for NASA's Advanced Cryogenic Rocket Engine. The major difference between the two versions of this injection pattern is that one has nearly twice the injection density of the other. Seven tests on the coaxial injector were made under this task. Two triplet injectors were also fabricated.

The third major task consisted of the design, development, and demonstration of a research tool, the "Transverse Excitation Chamber." This combustor is a variable angle sector chamber that can be varied from 9 to 36° and is used to determine the relative sensitivity of injection elements to instability. Six tests conducted with this combustion chamber yielded preliminary results on its effectiveness as a research tool.

II, Summary of Program (cont.)

A detailed analysis of combustion stability data obtained during the testing of this program is included in this report, and correlations with results from tests conducted on other programs were made. Considerable injector design studies were conducted on this program.

III. TASK I: ANALYTICAL MODEL DEVELOPMENT

A. ANNULAR COMBUSTOR ANALYSIS

Analytical tasks on this program included the extension of the basic Sensitive Time Lag model for cylindrical combustion chamber to include annular chambers. A preliminary analysis for the gas-generator-fed staged combustion system was also made.

The analysis for the annular combustion chamber fits into the basic framework of the cylindrical chamber analysis; a few minor modifications are required. In the general solution of the pressure perturbation equation by using separation of variables technique the solution is:

$$P_o = P_o(z)\ \psi_o(r)\ \Theta_o(\Theta)$$

Three ordinary differential equations for $P_o(z)$, $\psi_o(r)$ and $\Theta_o(\Theta)$ are obtained.

The solution for the annular combustion chamber case is concerned with the solution of $\psi_o(r)$. The differential equation for $\psi_o(r)$ is a Bessel equation of the form: $\psi_{\nu\eta}(r) = AJ_\nu(S_{\nu\eta} \cdot r) + BY_\nu(S_{\nu\eta} \cdot r)$

where:
- J_ν = Bessel function of the first kind
- Y_ν = Bessel function of the second kind
- $S_{\nu\eta}$ = the transverse mode number

By considering the cylindrical chamber case and the inner wall for the annular case separately and solving these two relationships simultaneously one obtains the following result:

$$J_\nu'(S_{\nu\eta})\ Y'_\nu(S_{\nu\eta}\ R) - J'_\nu(S_{\nu\eta}\ R)\ Y'_\nu(S_{\nu\eta}) = o$$

III, A, Annular Combustor Analysis (cont.)

The solution of this equation defines the transverse acoustic mode number, $S_{\nu\eta}$, for annular chambers. This equation has been solved in published literature and values of $S_{\nu\eta}$ are listed. Annular combustion chambers will alter the frequency of the transverse mode from the cylindrical case. The extent of this alteration is shown in Figure 1.

The configuration of the exhaust nozzle affects the nozzle admittance coefficient in much the same manner as for the cylindrical combustion chamber nozzle. The analysis for the annular nozzle is different primarily in the determination of the local contraction ratio. This is accomplished in the computer program by inputing both the inner and outer radii of the chamber and throat.

B. STAGED COMBUSTION MODEL

The system selected for the staged combustion model consists of (1) propellant feed system, (2) primary combustor, (3) secondary combustor, and (4) a turbine. The approach taken was to assume that the engine design parameters are given. The instability zones are then calculated for the secondary combustor, for assumed values of the primary combustion parameters (n_p, τ_p) and the total time lag of the hot gas τ_{FS}. The shift of the instability zones as these combustion parameters are varied shows the nature of the interaction between the two combustors.

The first-order analysis involves the following assumptions: the propellants are incompressible, the feed lines are short, the combustion is concentrated at the injector, and mean chamber Mach numbers are small.

As a general result of this analysis, it has been observed that the total time lag is from 6 to 10 times larger than the sensitive time lag.

III, B, Staged Combustion Model (cont.)

Consequently, for frequencies of interest to high frequency instability, the effects of the feed system terms will tend to average over the finite length of the combustion zone. Since the total time lag includes the time required for atomization, vaporization, mixing, and heating of the propellants, some interaction is likely in high pressure engines -- particularly in the secondary combustor.

IV. TASK II: ANNULAR THRUST CHAMBER ASSEMBLY TESTS

Annular thrust chamber assembly hardware consisted of three major components: (1) injector with attached axial centerbody, (2) combustion chamber, and (3) annular nozzle. Of the injectors designed for the annular combustion chamber, three were fabricated and one tested. A 600-element triplet injector to deliver 60,000 lb thrust with a total propellant weight flow of 180 lb/sec was fabricated, and a 200-element triplet injector to deliver 20,000 lb thrust with 60 lb/sec total propellant weight flow was also fabricated. To evaluate the effect of injection density on stability a 54-element coaxial injector was designed, fabricated, and tested for comparison with injectors previously built on Contract NAS 8-11741. This injector with the centerbody attached is shown in Figure 2 and again in Figure 3 as assembled prior to testing.

The combustion chamber and centerbody were ablatively cooled and both centerbody and chamber converged to form a throat. Two pyrotechnic igniters, three pulse guns, eight high-frequency pressure transducers and three static pressure transducers were located on the combustion chamber.

Tests were conducted at mixture ratios from 4 to 6 and chamber pressures of from 1500 to 2500 psia at a constant propellant weight flow of 180 lb/sec. Table 1 shows the results from this testing.

Each instability pattern observed during the annular testing was nearly identical in its form and was initiated by the 20-grain charge, using a tangential pulse gun. The peak-to-peak overpressures of these instabilities ranged from 800 to 2000 psi. The frequency was approximately 2500 Hz, depending on the acoustic velocity value for each test condition.

Test No. 7, using 200°R hydrogen, experienced -- in addition to its high-frequency instability -- a low-frequency (500 Hz) oscillation which

IV, Task II, Annular Thrust Chamber Assembly Tests (cont.)

attained an amplitude of 750 psi. Except for one brief occurrence of a low frequency (100 Hz and 100 psi) instability on Test No. 3, there was no other indication of a coupling between the feedlines and the combustion process. It should be pointed out that the large pressure drops across the injector face due to the small orifice design result in significant hydraulic resistances in the circuit.

The effect of chamber Mach number was evaluated in this series of tests by comparing results with test results from Contract NAS 8-11741. The two Mach numbers used were 0.176 and 0.29.

This verification of the Mach number as an important correlating parameter, together with the work of NASA's Lewis Research Center, has led to the selection of six design parameters as being important in combustion stability evaluations. These parameters are functionally related by the following formula:

$$f_s = 4550 \left(\frac{M_c}{d_i}\right)^{0.15} \frac{(P_c/P_{critical})^{1/3}}{F}$$

where:

f_s	=	Sensitive frequency (hz)
M_c	=	Chamber Mach Number
d_i	=	Injection orifice diameter of least volatile propellant, inches
$P_{critical}$	=	Critical pressure of least volatile time controlling propellant, psia
P_c	=	Chamber pressure, psia
F	=	Function of the velocity ratio and impingement angle. This function is not defined for the nonimpinging showerhead coaxial element.

IV, Task II, Annular Thrust Chamber Assembly Tests (cont.)

This formula may be used by a designer in his preliminary work to develop an injector configuration whose sensitive frequency is displaced from the first tangential acoustic mode of the thrust chamber. These first order estimates may then be combined with the analytical results of the sensitive time lag computer program to obtain a more detailed engine configuration. Of prime importance is the overall trends which may be observed from changes in any of the six design parameters.

V. TASK III: TRANSVERSE EXCITATION CHAMBER TESTING

The concept of a transverse excitation was originated at Aerojet on a Company-sponsored Independent Research and Development program to evaluate transverse modes of pressure oscillation (tangential instabilities) and simulate the pressure/velocity effects as experienced in a rocket combustion chamber. The transverse excitation chamber tested on this program is described in the following paragraphs.

The excitation chamber consisted of three principal parts: (1) chamber, (2) nozzle, and (3) injector inserts. The chamber is a 36° sector of a circle 2-1/4 inches in height. A drawing of this chamber is shown in Figure 4. The 36° sector of the 30-inch radius results in a fundamental acoustic frequency in the transverse mode at 1800 Hz. The smallest chamber angle was 9°, which results in a chamber acoustic frequency of 7000 Hz. The height of the chamber (2.17) inches limits the associated acoustic frequency to greater than 13,000 Hz. A single chamber design was used and the chamber angle was varied by inserting steel wedges in the combustion zone to achieve the desired angle. The O-ring-sealed chamber lid is removable to facilitate various injection concepts; ablative liners and throats were used to protect the areas most vulnerable to erosion.

Two triplet injectors were designed and fabricated for testing. One was an 11-element triplet, and the other was a three-element triplet similar to the 11-element triplet design in all but the orifice diameters. The purpose of the larger orifice size was to determine the effect of orifice diameter or thrust per element on combustion stability. Only the 11-element injector inserts were tested during this program. A photo of the 11-element injector is shown in Figure 5.

Testing of the transverse excitation chamber was conducted to measure the growth rates of spontaneous instabilities or decay rates of pulsed pressure perturbations.

V, Task III, Transverse Excitation Chamber Testing (cont.)

Mixture ratios of around 4 and chamber pressures of 1300 to 1400 psi were evaluated during the test series. Two of the three valid tests (in three tests the fuel valve was inoperative) attained these conditions and both experienced spontaneous instabilities. One test exhibited a growth rate of 650 db/sec, while the other test had two distinct growth periods. The first. occurring at the onset of the instability, had a 600 db/sec rate, while the second growth period came after thermal ignition of the 40 grain pulse charge had disrupted the initial instability. Its growth rate was 330 db/sec.

From the data obtained, the indication is that over the frequency range of 3000 to 4500 Hz the triplet element shown in Figure 3 has a peak response at 3300 Hz (see Figure 4) at the specified steady state conditions. This peak response frequency, when related to τ by the relationship

$$\tau = \frac{1}{2f}$$

compares favorably with previous correlations of τ for this type of injector.

VI. CONCLUSIONS

1. The use of combustion chamber Mach number as a stability correlating factor was examined and was found to have a relatively minor effect which appears to be related to the sensitive frequency as follows:

$$f_s = 4550 \left(\frac{M_c}{d_i}\right)^{0.15} \frac{(P_c/P_{crit})^{0.33}}{F}$$

f_s	=	Sensitive frequency
M_c	=	Chamber Mach Number
d_i	=	Injection orifice diameter of least volatile propellant (inches)
P_{crit}	=	Critical pressure of least volatile propellant (psia)
P_c	=	Chamber pressure, (psia)
F	=	Function of the velocity ratio and impingement angle

2. For the annular chamber tests, all recorded high frequency instabilities were pure first tangential modes pulsed at a comparatively low shock level (20 grains). This indicates that, for the operating parameters, the combustion process was close to its spontaneous oscillation regime.

3. The incidence of pure modes rather than the mixed modes noted with previous tests with a cylindrical chamber indicates a higher value for the sensitive time lag (τ) and, correspondingly, a lower sensitive frequency value (since $\tau = \frac{1}{2f}$). This conclusion is logical when the annular chamber design is considered (see Figure 2). Placing the centerbody in the injector has two effects: (1) the centerbody acts as an effective barrier against the radial modes, and (2) the integrated effect of propellant injection (mass distribution) is over larger radial distances -- or in a zone of greater tangential acoustic mode sensitivity.

VI, Conclusions (cont.)

4. The fact that lower pulse charges triggered instability does not necessarily indicate a reduction in pressure interaction index (the sensitive time lag term, n). This apparent increased combustion sensitivity could be due to the fact that pure modes are initiated at lower n values than are the combined modes. In fact it is analytically theorized that the pressure interaction index, n, was approximately the same for both the cylindrical and the annular chamber coaxial injection test phases (that is equal to approximately 0.5).

5. The excitation chamber has potential as a stability rating tool which will give many inexpensive tests and will evaluate many single parameter characteristics of an injection pattern. A complete spectrum of frequencies can be evaluated; short duration tests are adequate to evaluate an injector. Injector modules are inexpensive and easily replaced; the removable chamber lid permits testing of long injection elements (i.e., tubelet or HIPERTHIN), servicing of the combustion chamber protective coating, and removal and replacement of wedge inserts.

6. It is recommended that dynamic high frequency transducers be flush mounted for proper wave description.

7. It is recommended that the transverse excitation chamber as a research tool be used extensively to evaluate the effect on combustion stability of the various injection parameters (i.e., injection velocities, velocity ratio, fuel temperature orifice chambers, injection distribution, etc.) on a variety of injection concepts (i.e., triplets, quadlets, coaxial, HIPERTHIN, etc.). These tests should serve as a single parameter variation test and should evaluate a range of design and test conditions to determine optimum operating conditions for combustion stability and performance for a given injector design.

VI, Conclusions (cont.)

8. It is recommended that a limited number of verification tests be conducted using conventional cylindrical or annular combustion chambers to evaluate the injectors tested in the transverse excitation chamber in pulse rated stability tests. These tests should serve as demonstration tests to determine correlations between conventional injectors and excitation chamber results.

TABLE 1

STEADY STATE AND STABILITY TEST RESULTS

	OPERATING CONDITION PARAMETERS						STABILITY PARAMETERS								
							High Frequency						Low Frequency		
Test No.	Time, sec	Mixture Ratio	Velocity Ratio	Chamber Pressure, psia	Hydrogen Temperature, °R	Avg. Mach No.	Frequency, Hz	Amplitude, psi (peak-to-peak)	Mode	Cause SP. or P.	Grain Size/ Pulse Ampl.	Stability	Frequency, Hz	Amplitude, psi (peak-to-peak)	REMARKS
001	1.016	6.05	3.44	1575	83.4	0.29	2400	800	TT	*P	20/960	*S	--	--	
	1.210	5.86	3.61	1532	82.9										
	1.604(FS-2)	6.62	3.14	1417	80.6										
002	1.140	5.82	3.39	1425	75.5	0.29	2450	1300	TT	P	20/250	S	--	--	Oxidizer flow measurement erratic at FS-2.
	1.575	5.96	3.27	1467	76.5										
	1.944(FS-2)	SEE REMARKS		1378	76.6										
003	0.970	3.94	16.50	413	98.3		N O R E C O R D S					U	100	100	Ox. valve malfunctioned.
	1.140	3.70	16.06	454	99.0							S	--	--	
	1.495	4.06	13.01	452	90.1						20				
	1.577	3.15	16.14	462	94.1						40				
	1.693	3.97	17.44	445	104.5						80				
	2.001(FS-2)	3.20	14.39	454	85.5										
004	0.996	5.92	3.47	2345	96.9	0.176	2500	1000	TT	P	20/1000	S	--	--	
	1.475	4.57	4.10	2395	80.1										
	1.596(FS-2)	5.78	3.18	2494	79.4										
005	SEE REMARKS	4.88	26.37	456	172.0		N O R E C O R D S					S	--	--	Ox. valve malfunctioned. Average data used.
006	0.900	3.39	6.13	2285	102.5	0.176	2700	2000	TT	P	20/225	S	--	--	
	1.186	3.72	4.84	2302	78.5										
	1.245(FS-2)	3.76	4.76	2221	77.8										
007	0.900	6.53	6.73	1221	143.5										
	1.086	6.93	6.75	1419	167.8	0.177	S E E R E M A R K S			P	20/100	U	500	750	High frequency pressure instruments sustained damage; however, the data (wave forms) recorded were similar to the previous unstable tests.
	1.462(FS-2)	7.15	7.01	1317	175.4							U	500	750	

*P = pulsed, S = stable, Q = unstable

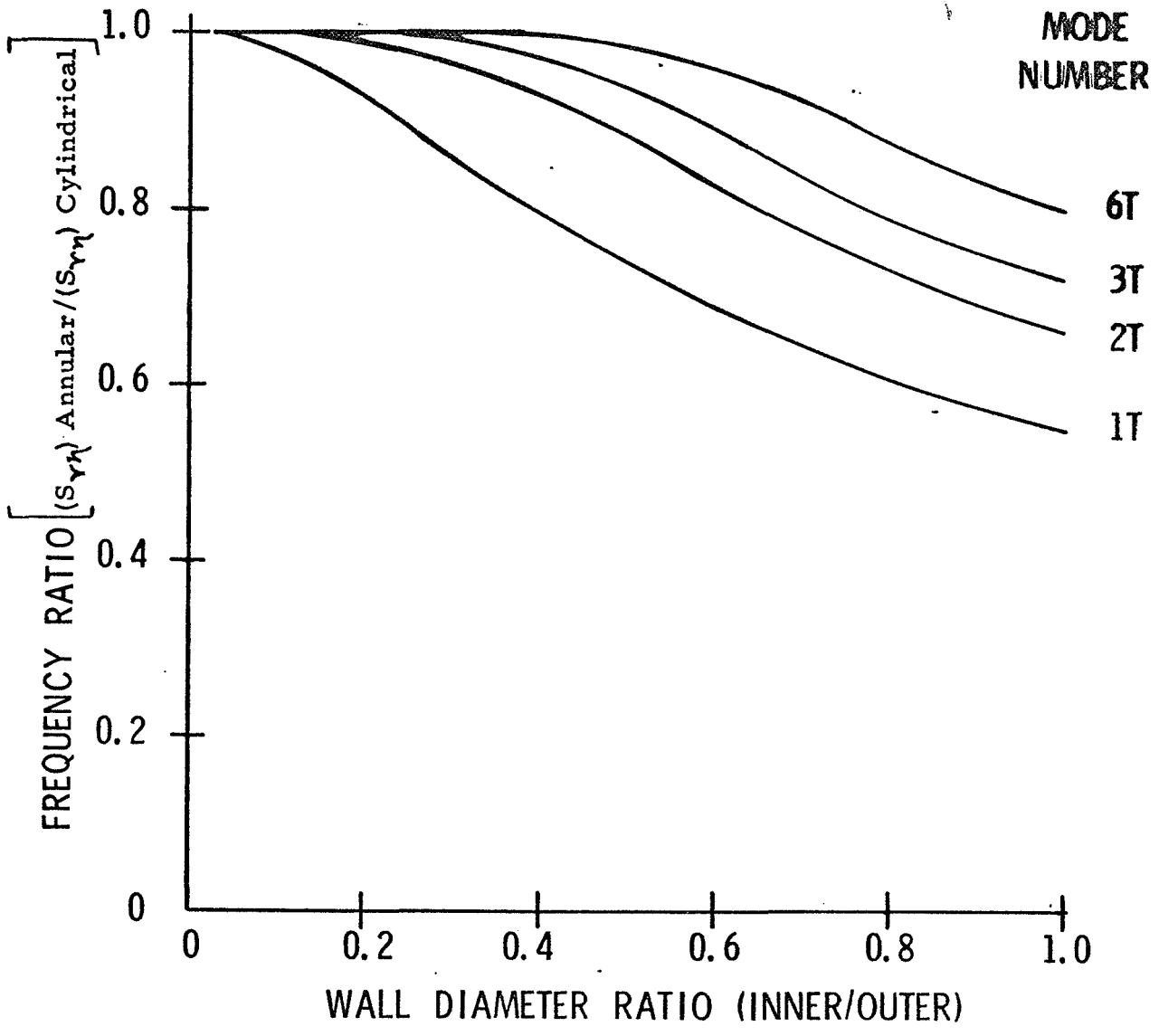

Tangential Mode Acoustic Frequencies for Annular Chambers

Figure 1

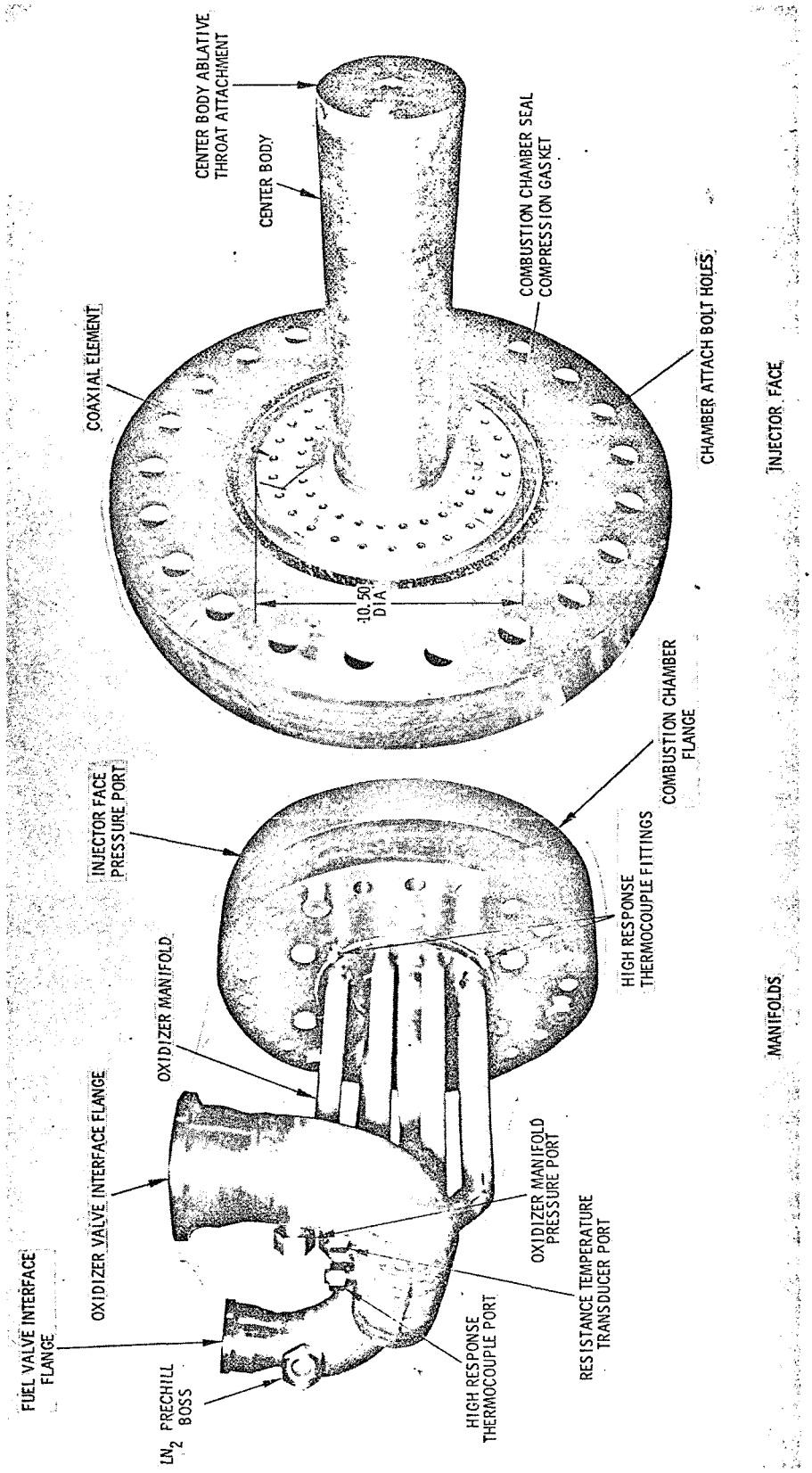

Figure 2

Annular Coaxial Injector

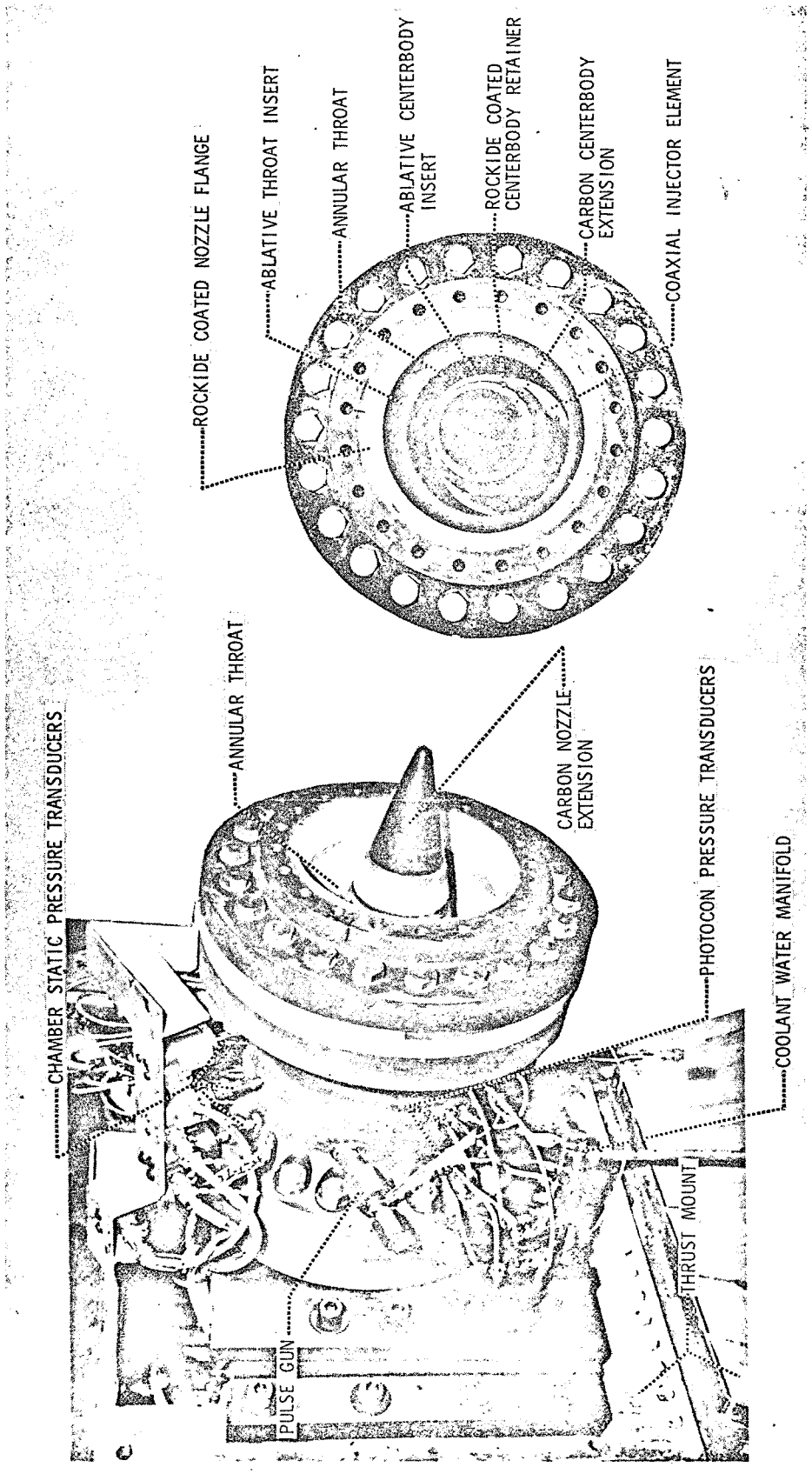

Annular Thrust Chamber Assembly on Test Stand C-6

Figure 3

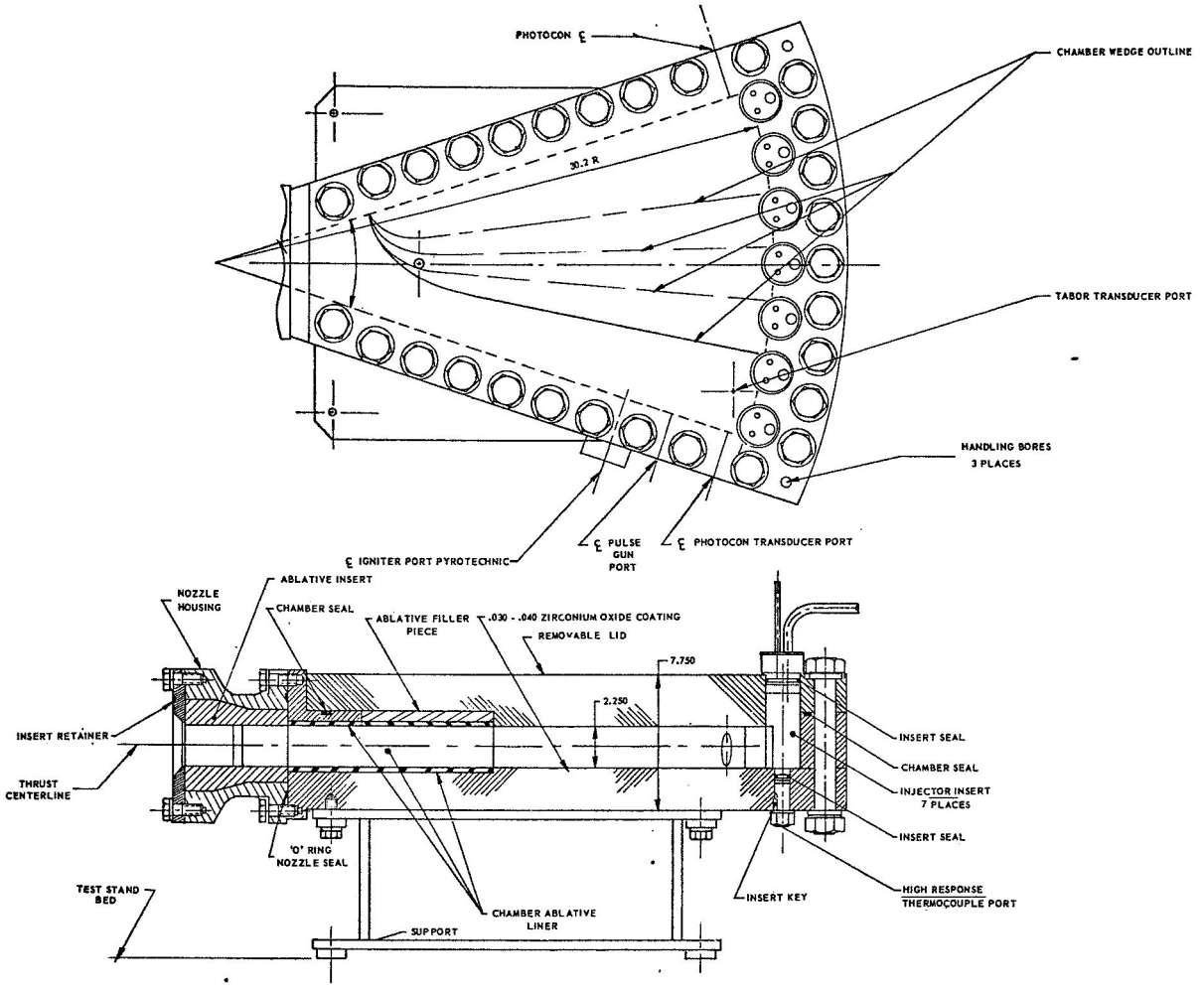

Transverse Excitation Chamber Assembly Schematic

Figure 4

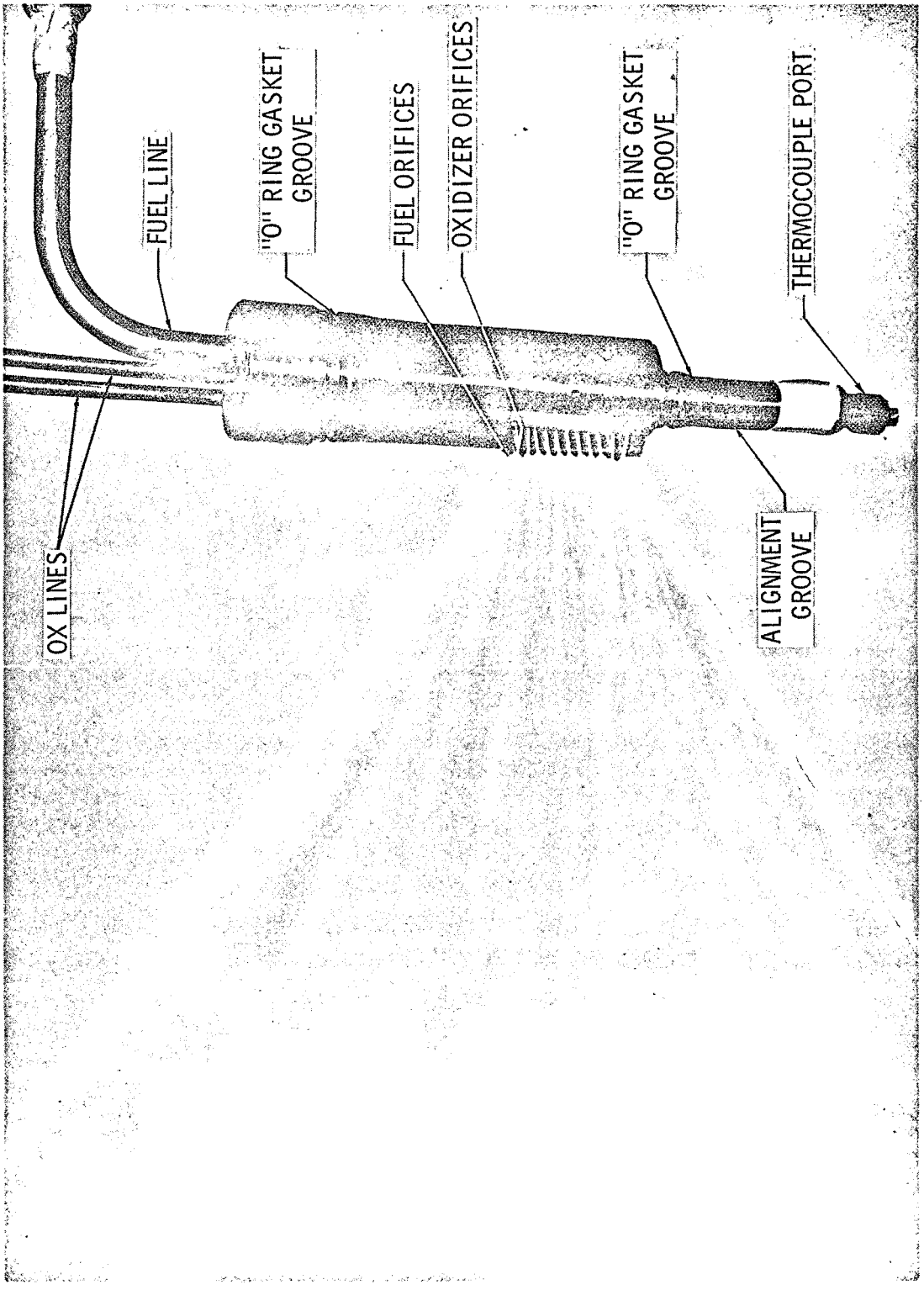

Transverse Excitation Chamber Triplet Injector Hydroflow Pattern

Figure 5